Precast Wall Panel Design

By
Edward Losch, PE, SE

What is a Precast Concrete Sandwich Wall Panel?

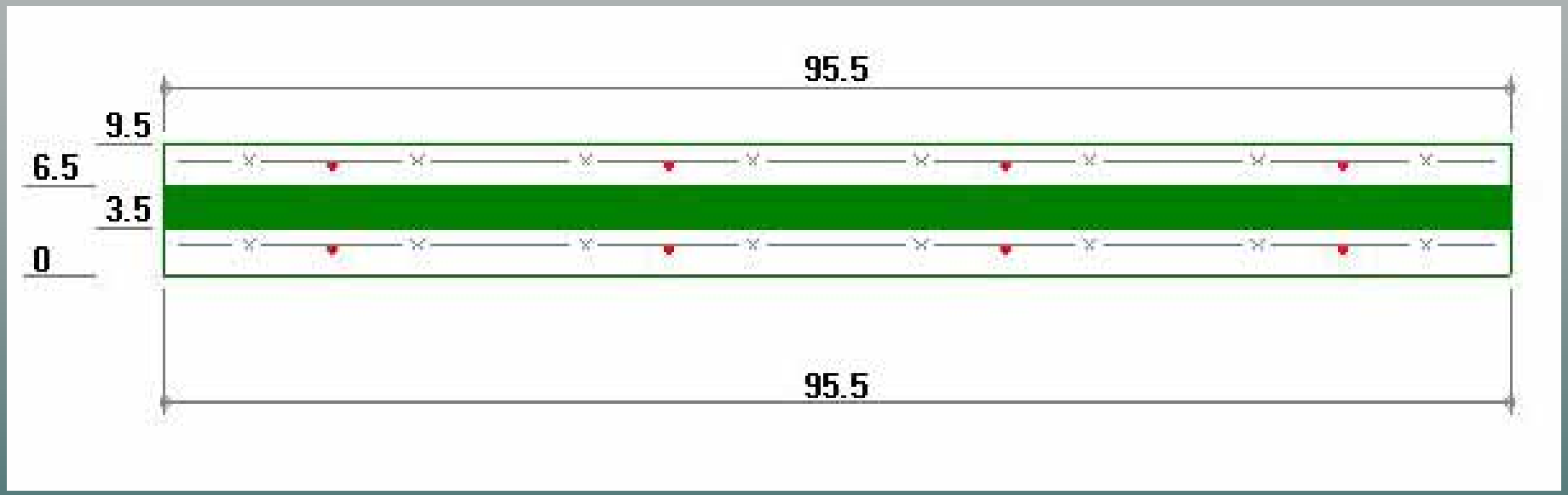

Typical Precast Concrete Sandwich Wall Panel

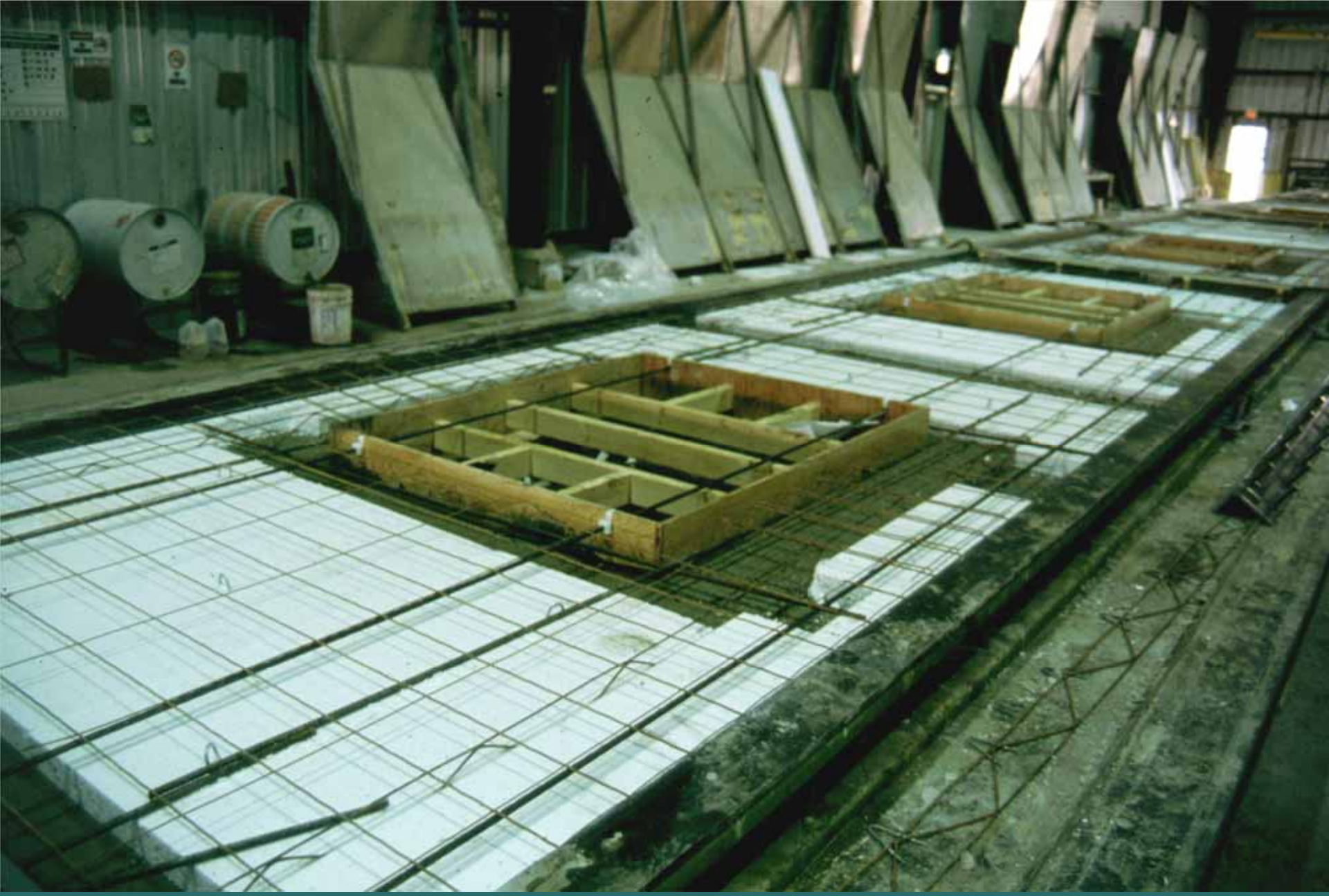

Long-Line Form

Wythe(s) Prestressed

Trucked & Erected (Non-loadbearing)

Load-Bearing Panels

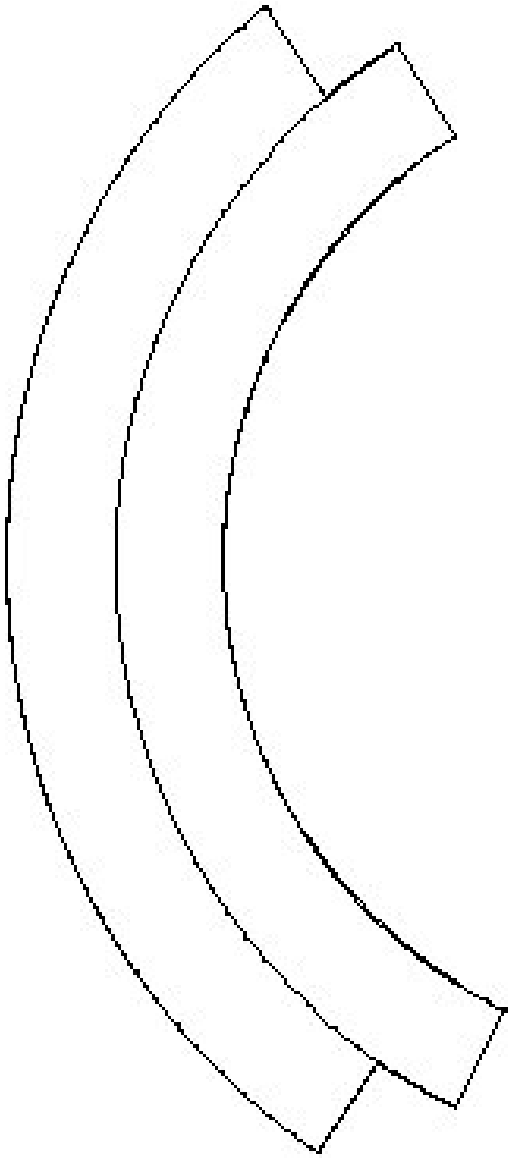

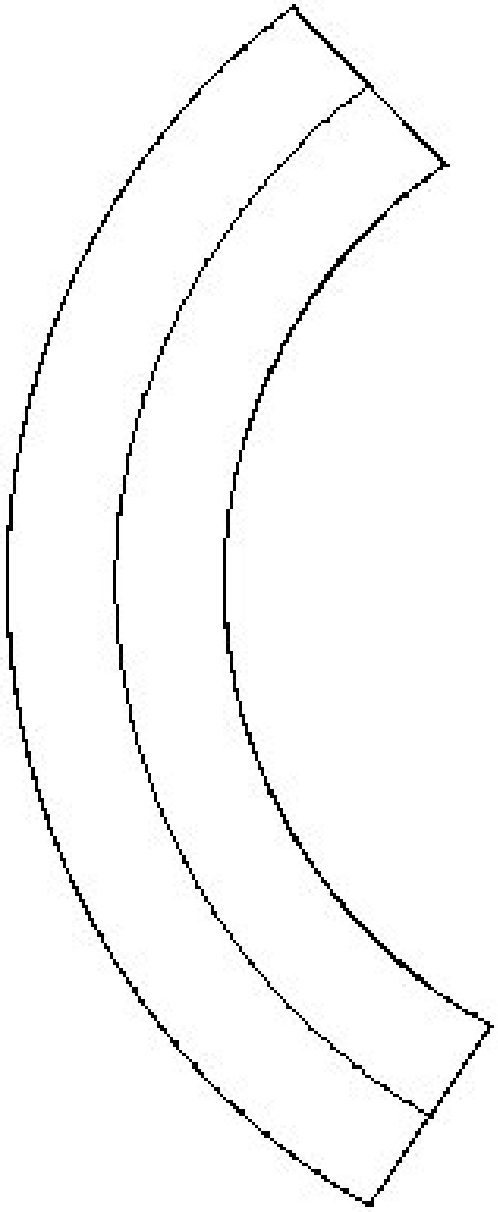

Non-Composite

Composite

How are Sandwich Wall Panels Manufactured?

Wet-Cast:

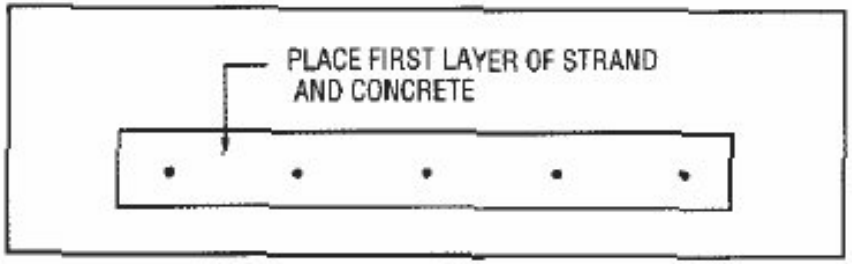

Fig. 4.3.1.a. First step — Place first layer of strand and concrete.

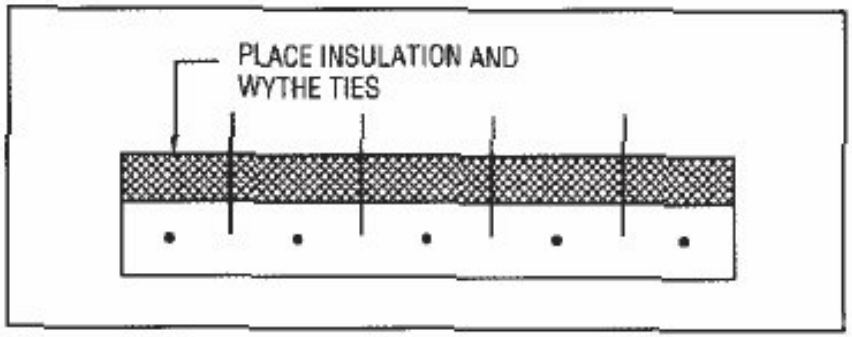

Fig. 4.3.1.b. Second step — Place insulation and wythe ties.

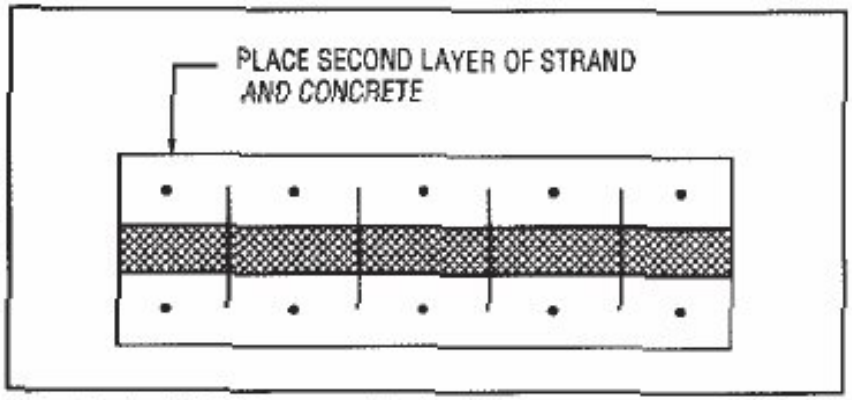

Fig. 4.3.1.c. Third step — Place second layer of strand and concrete.

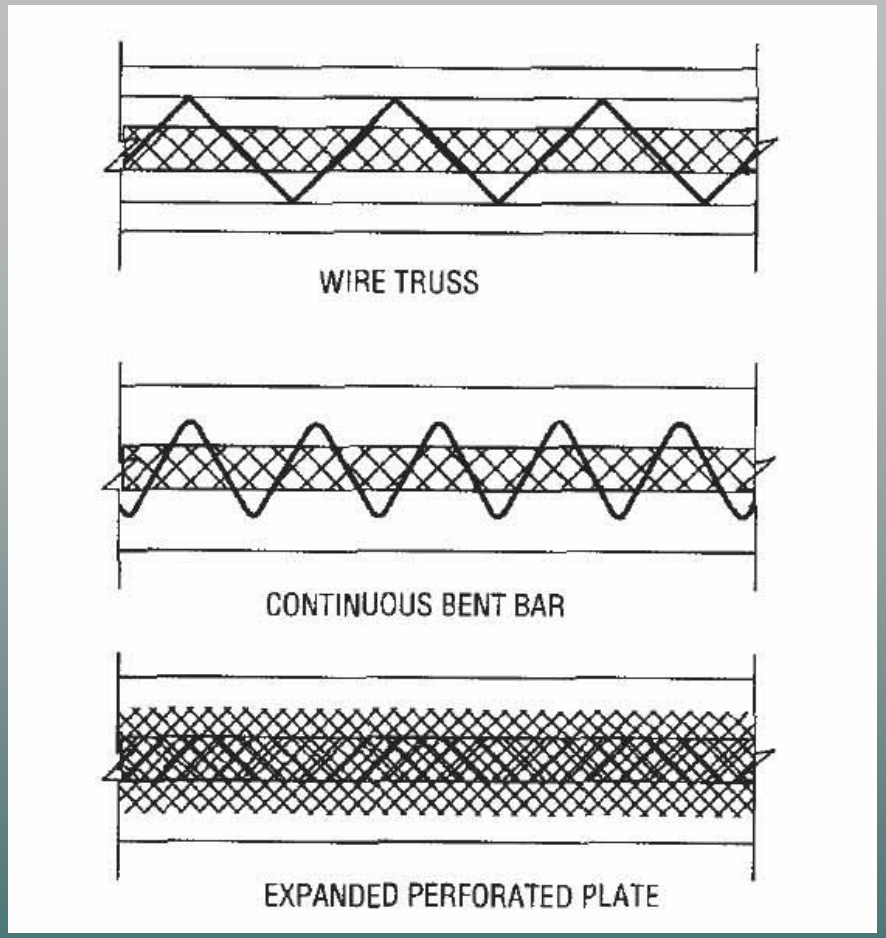

Shear Trusses

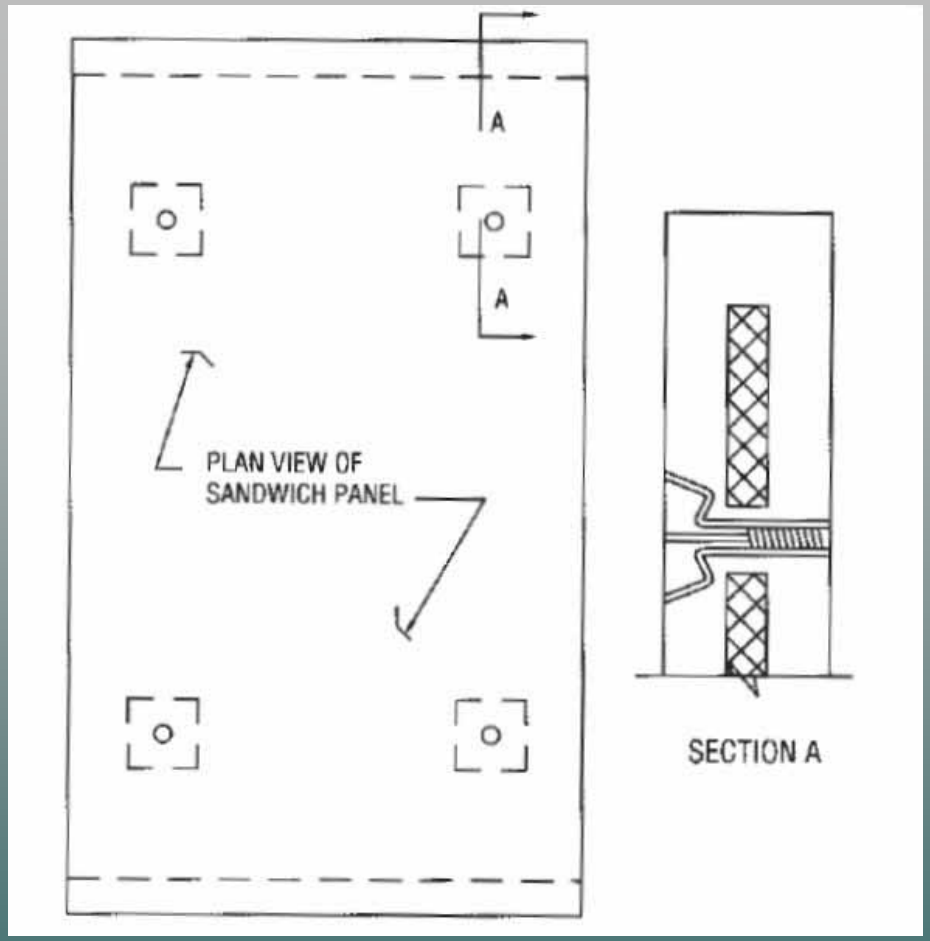

Solid Zones

Wet-Cast Composite Design

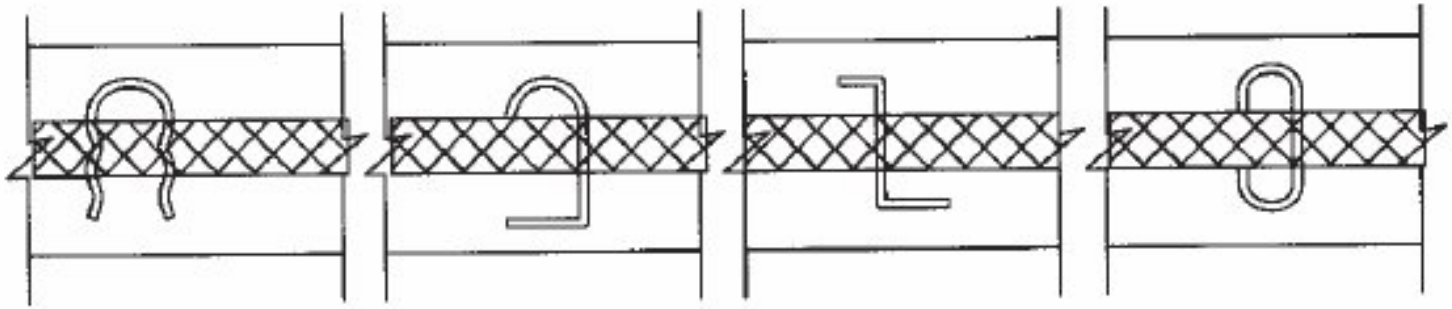

METALLIC PIN CONNECTORS

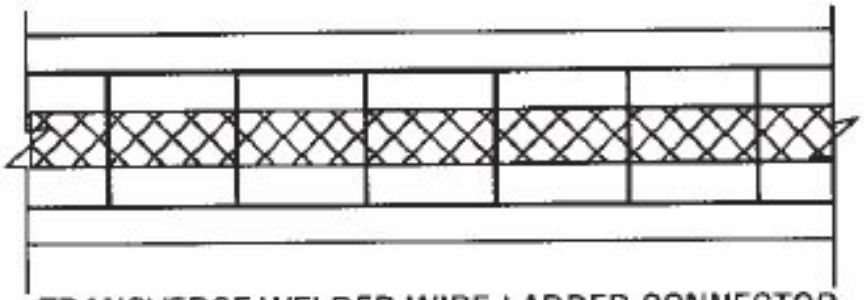

TRANSVERSE WELDED WIRE LADDER CONNECTOR

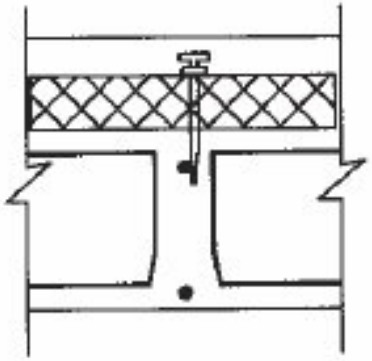

POLYPROPYLENE PIN CONNECTOR

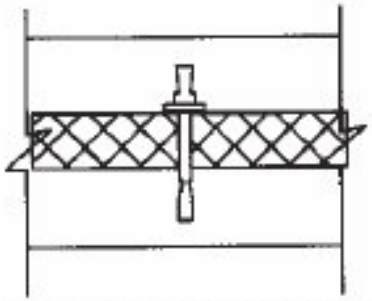

GLASS-FIBER REINFORCED VINYL-ESTER CONNECTOR

Non-Composite Wythe Connectors

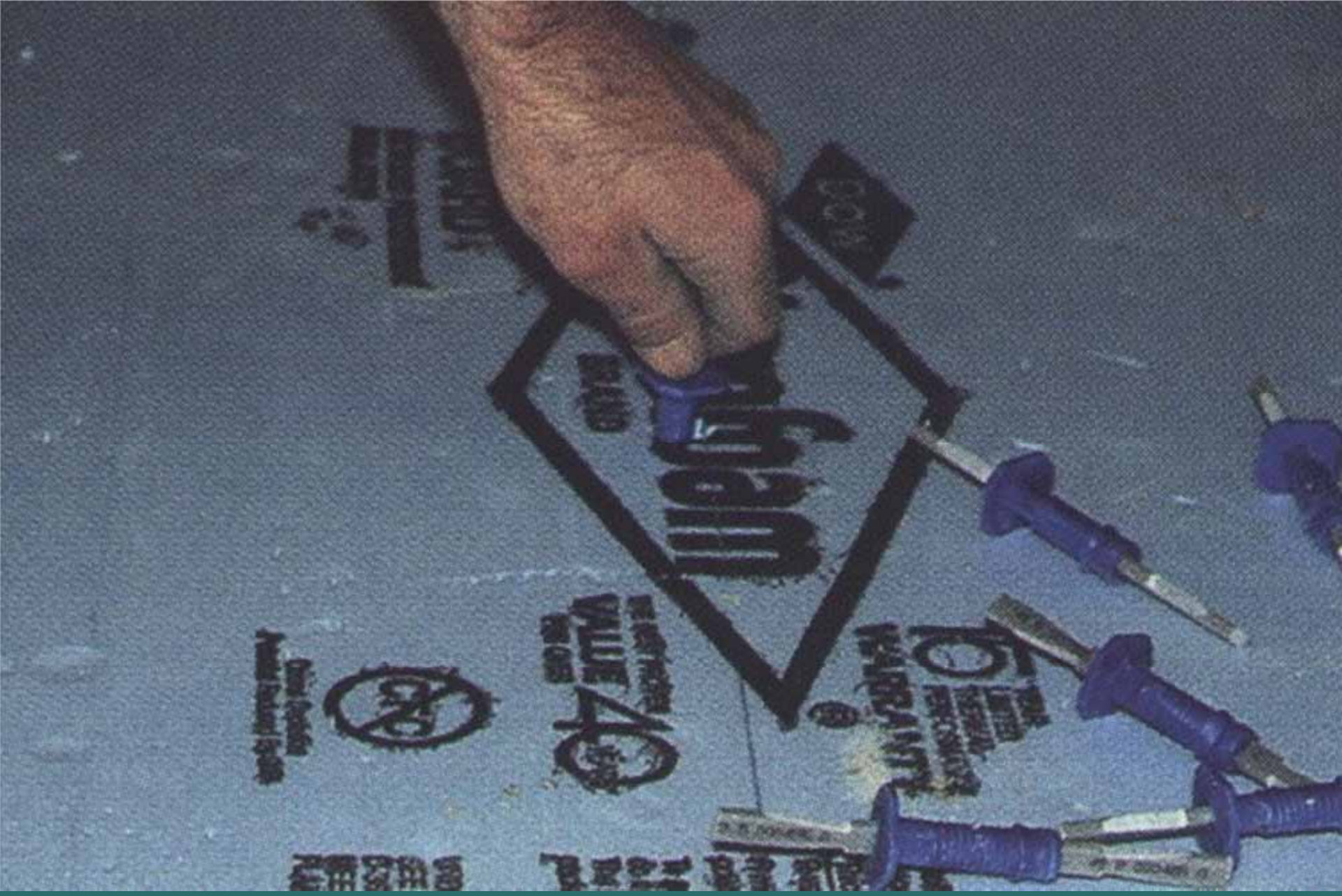

Pin Connectors Inserted in Pre-Drilled Holes

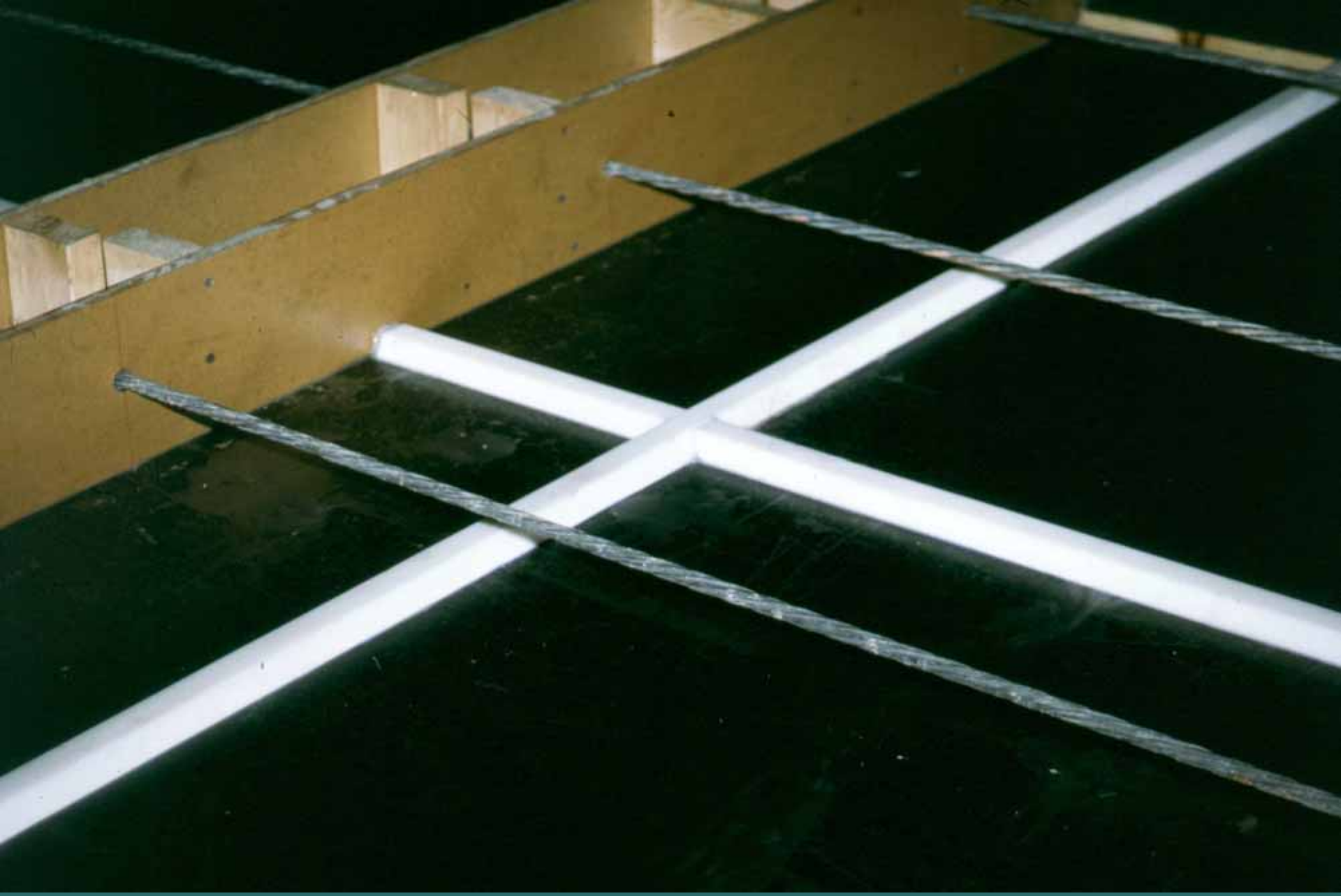

Reveal Strips Glued to Steel Form

Form Liner Located in Panel Form

Panel with Form Liner Impression and Reveals

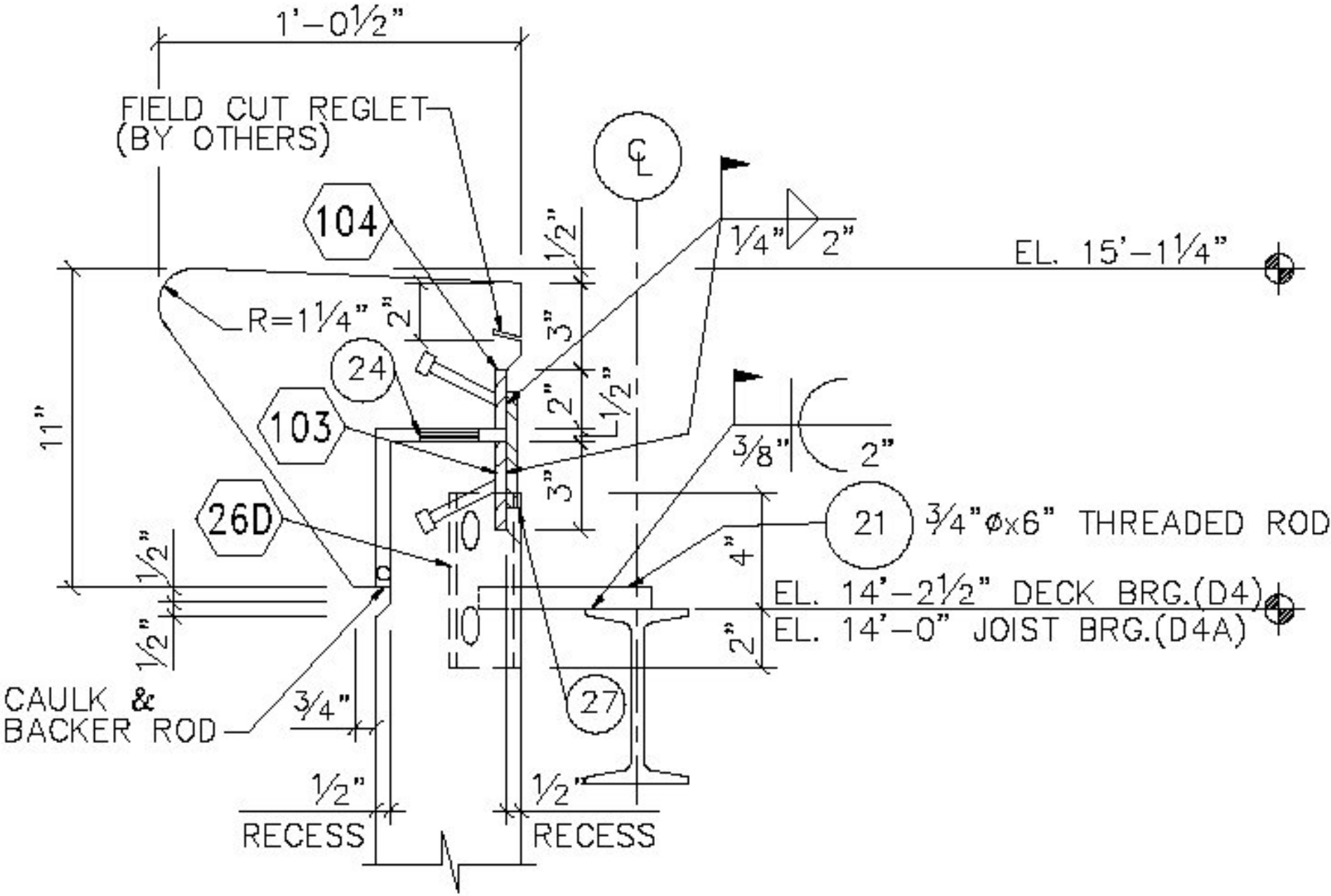

Cornice Cast Separately, Attached at Site

Sandblasting Panel - Side Lifters Required

Stained Finish

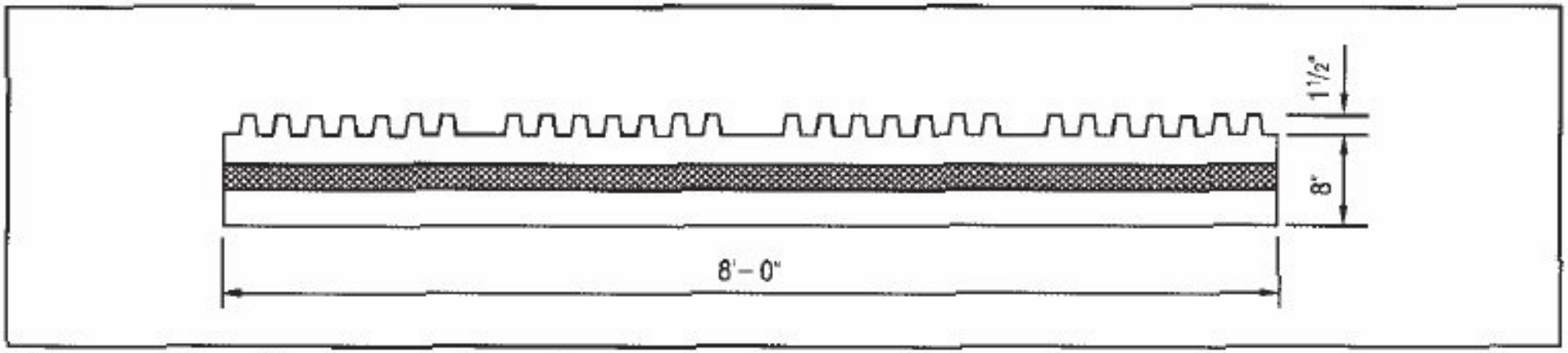

Fig. 4.3.3.a. Corewall Panel System (wet cast).

Corewall Panel with Random Rib Finish

Random Rib Finish

Dry-Cast:

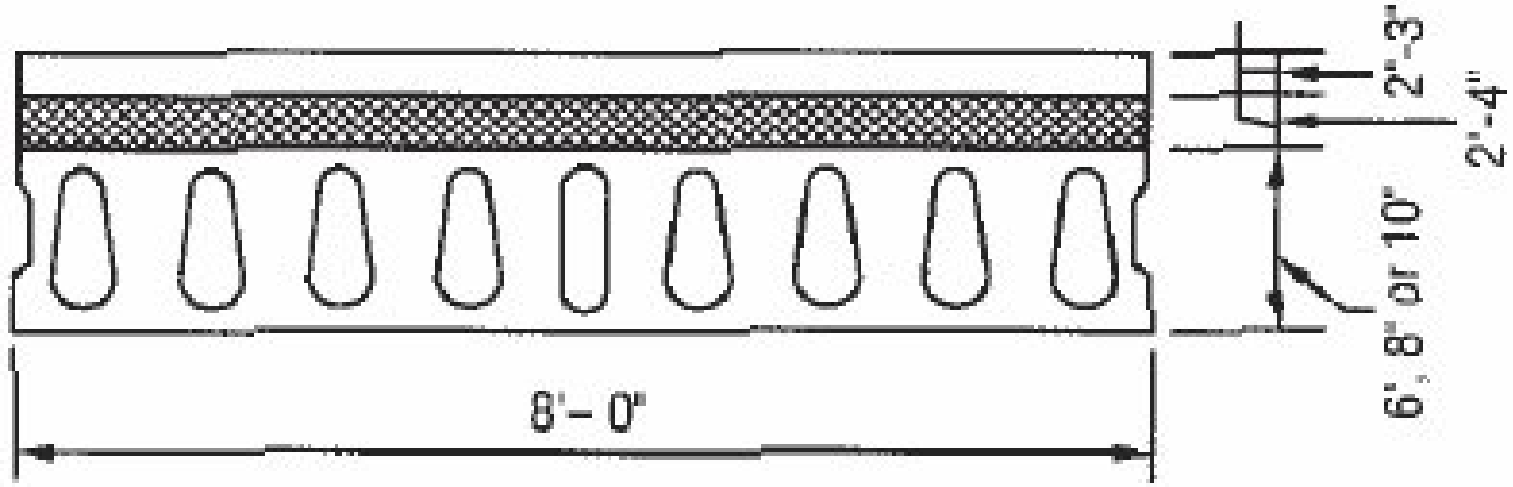

Spancrete Non-composite Wall Panel Section

8 ft. Wide Spancrete Panels

Spancrete 8 ft.
Spandrel Panels:

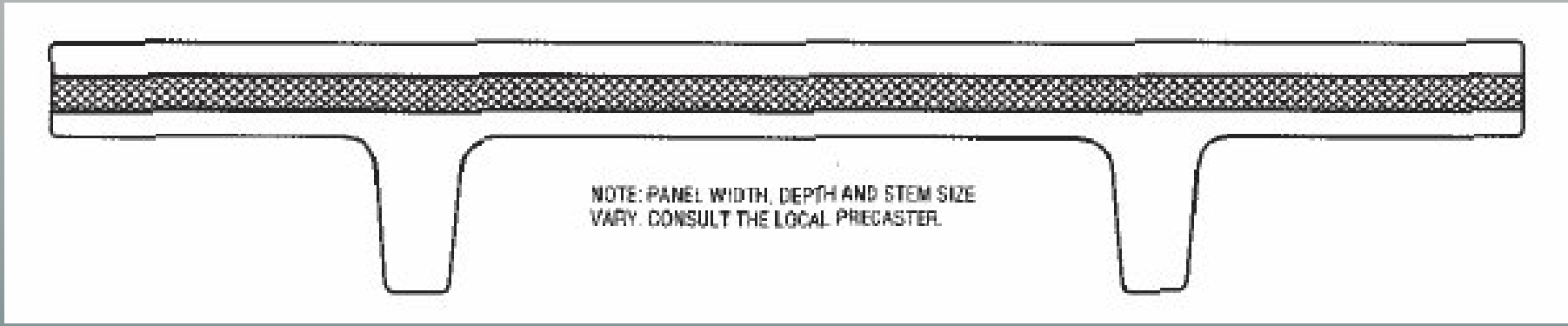

Double-Tee Wall Panel Section

PEC Soundwall

PEC Soundwall form used for Scattered-Site housing in Chicago

Scattered-Site Housing

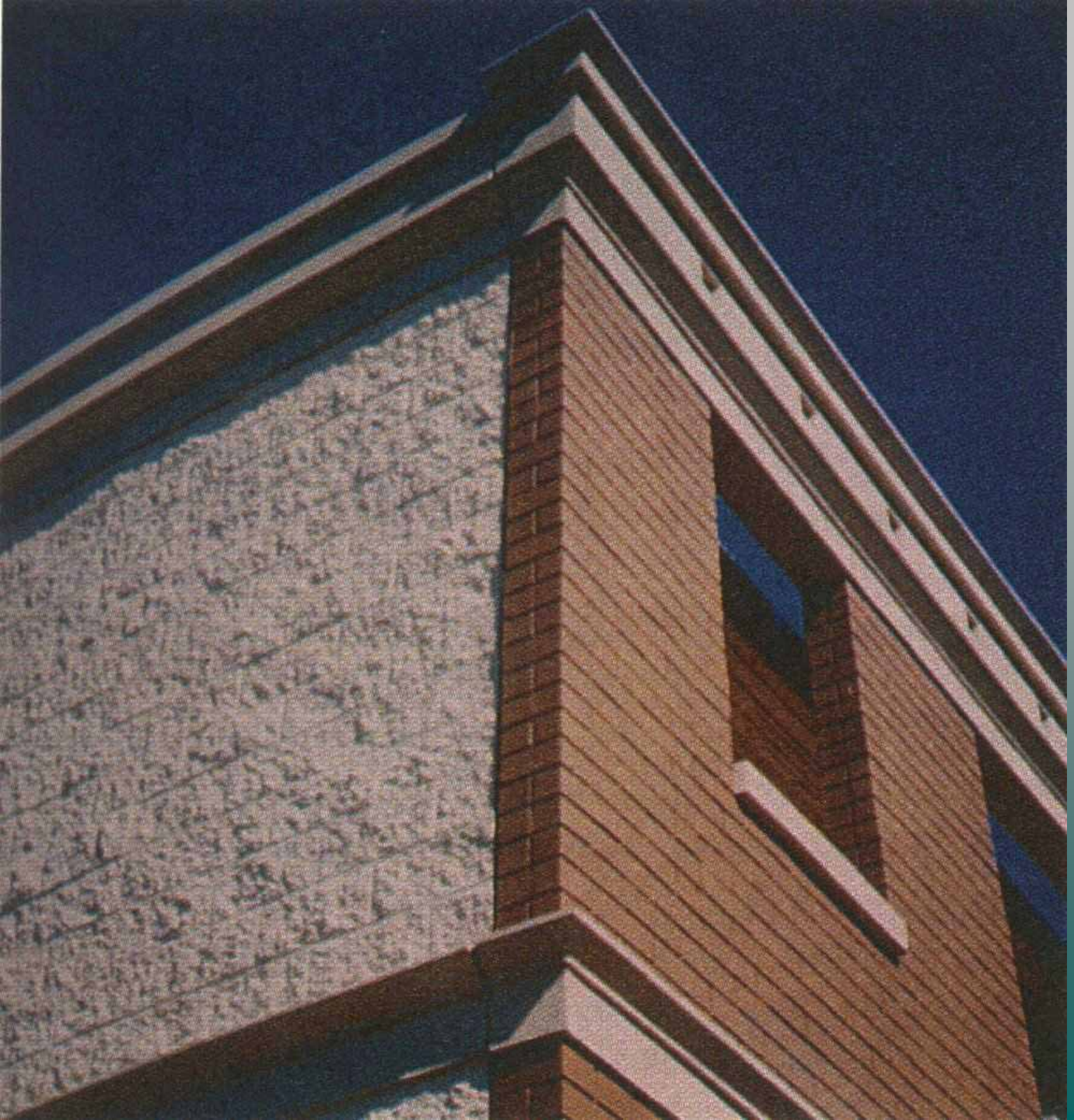

Scattered-Site Housing

Insulation Types:

- Expanded Polystyrene, R=4 per inch

- Extruded Polystyrene, R = 5

- Polyisocyanurate, R = 7 to 10

- Phenolic foam: can cause corrosion when wet!

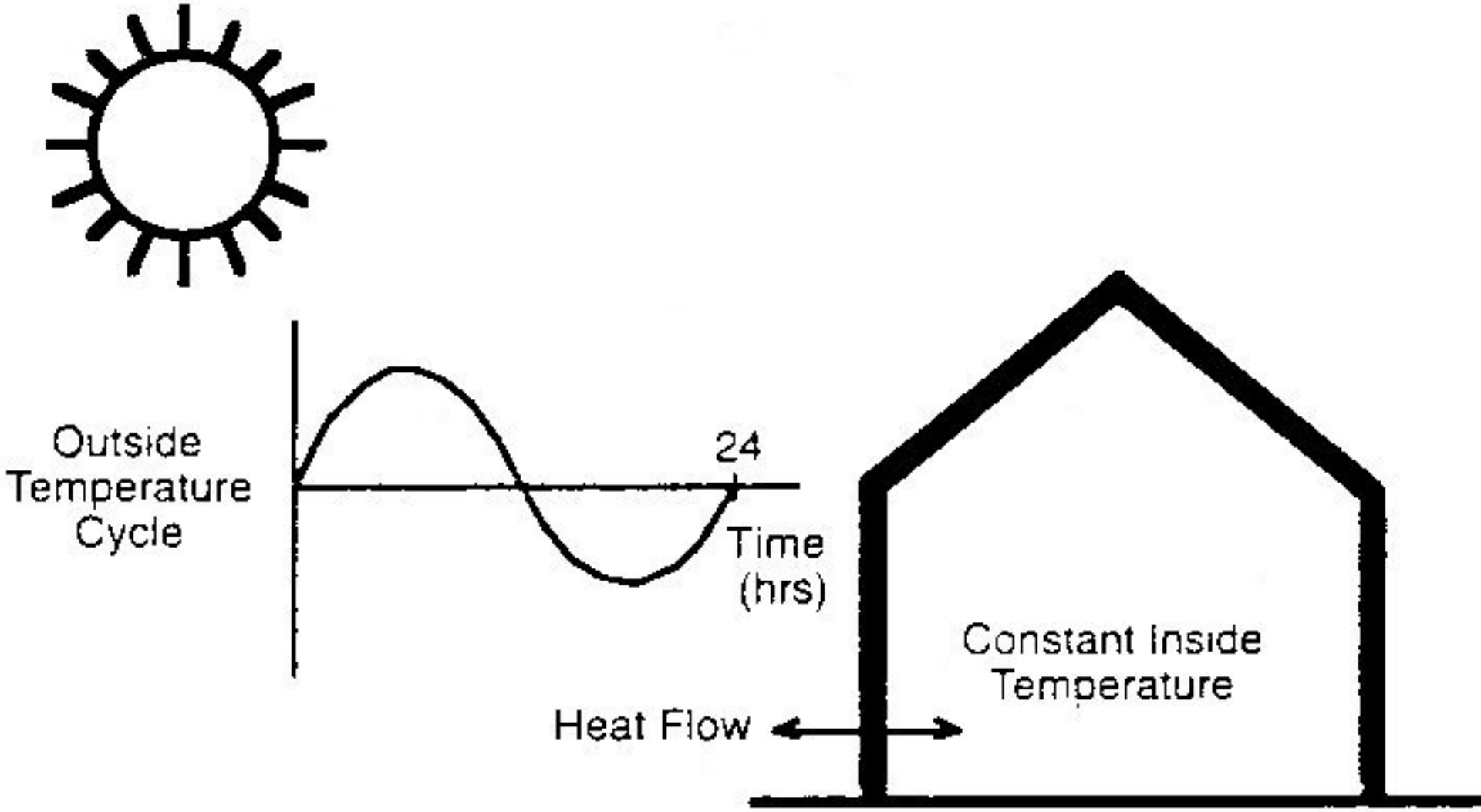

Thermal Lag from Concrete Panel Mass

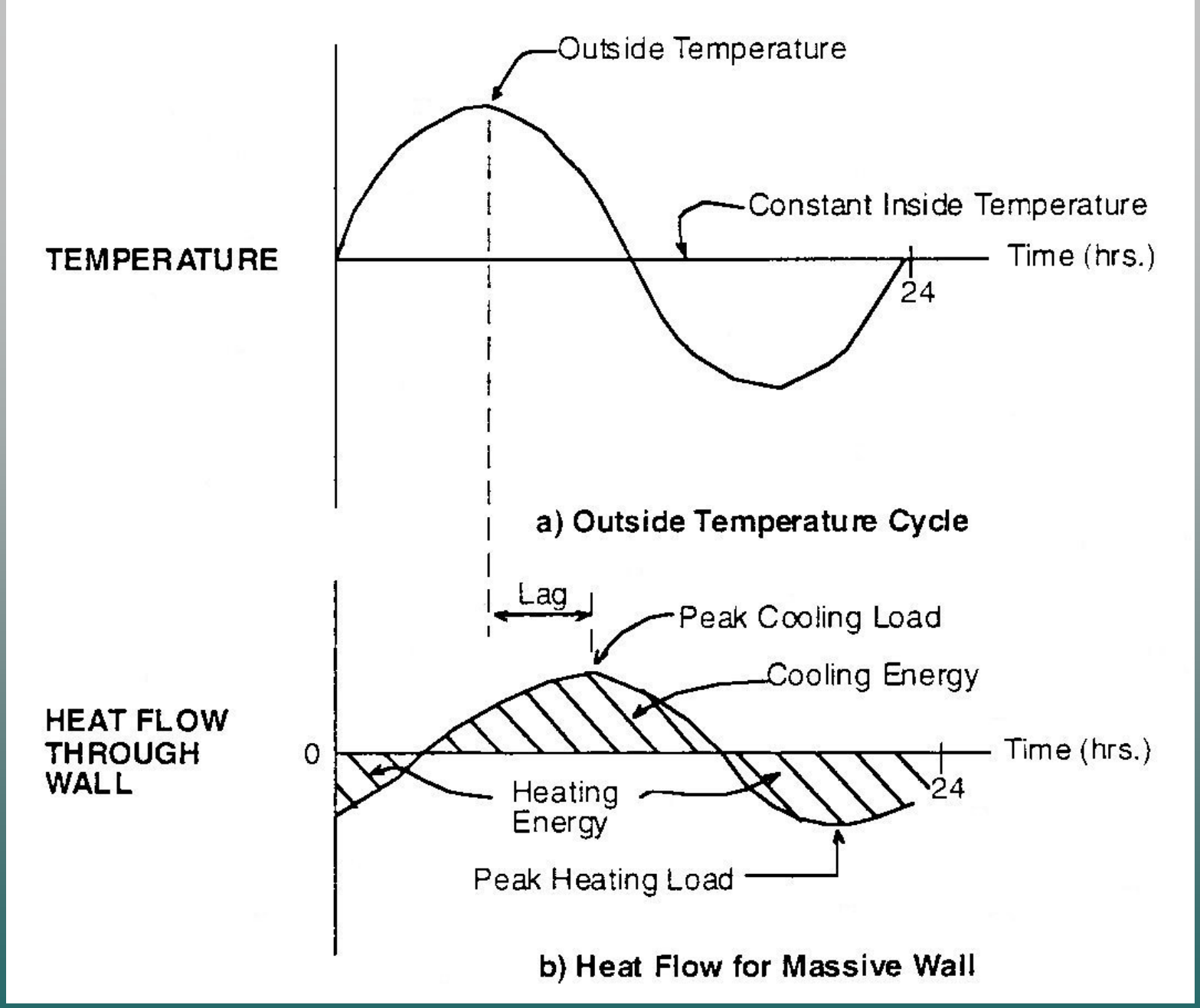

Thermal Lag from Mass of Concrete Panel

Manufacturing Tolerances

Use PCI Mnl 116 (not 117):

"Manual for Quality Control for Plants and Production of Structural Precast Concrete Products"

How are Sandwich Wall Panels Handled & Erected?

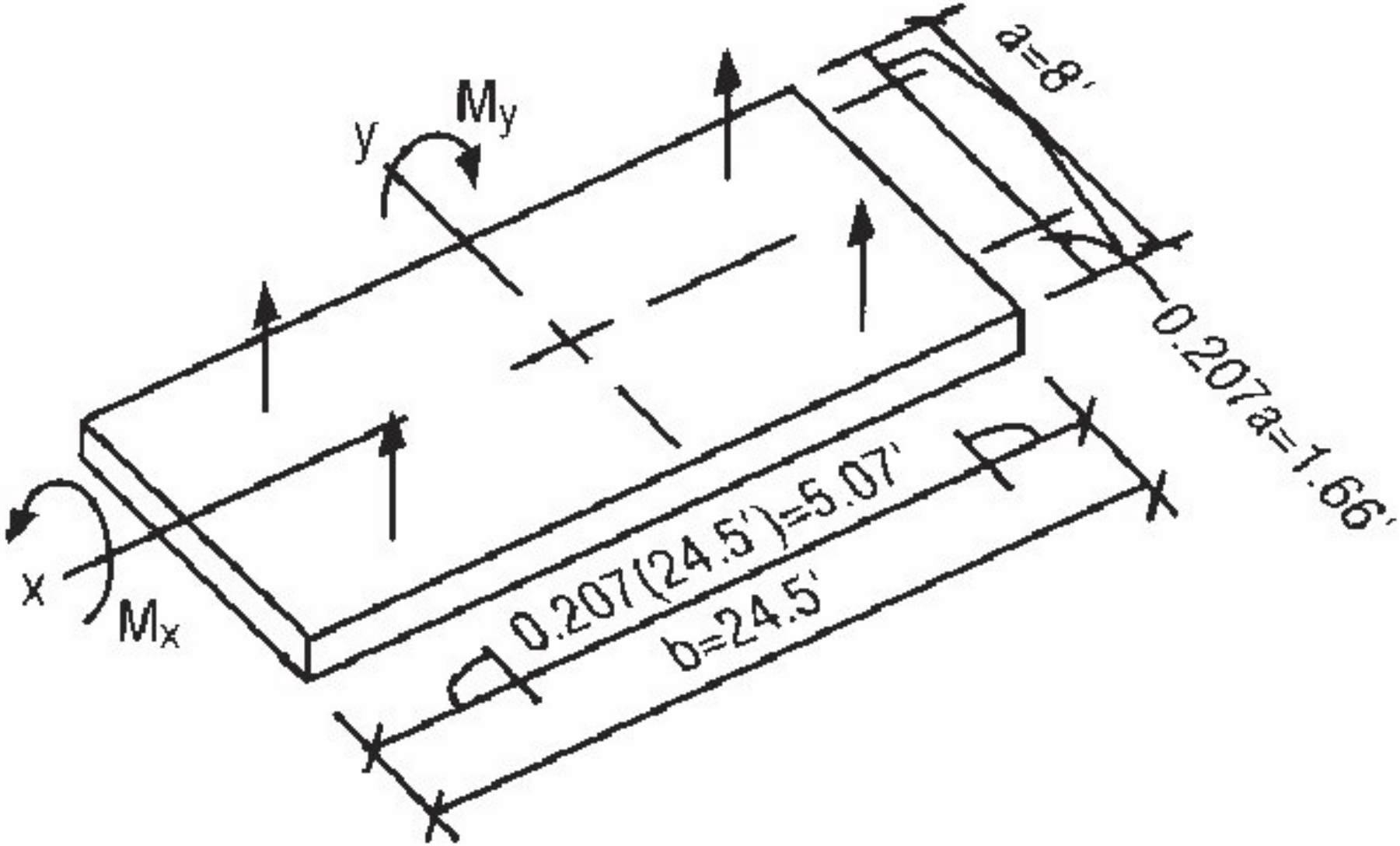

Lifter Locations for Stripping & Handling

Yard Storage

Yard Handling with Shuttle-Lift

Trucking Extra-Wide Panel on Slant Frame:

Panels arriving at the Job Site

Single-Line Lift

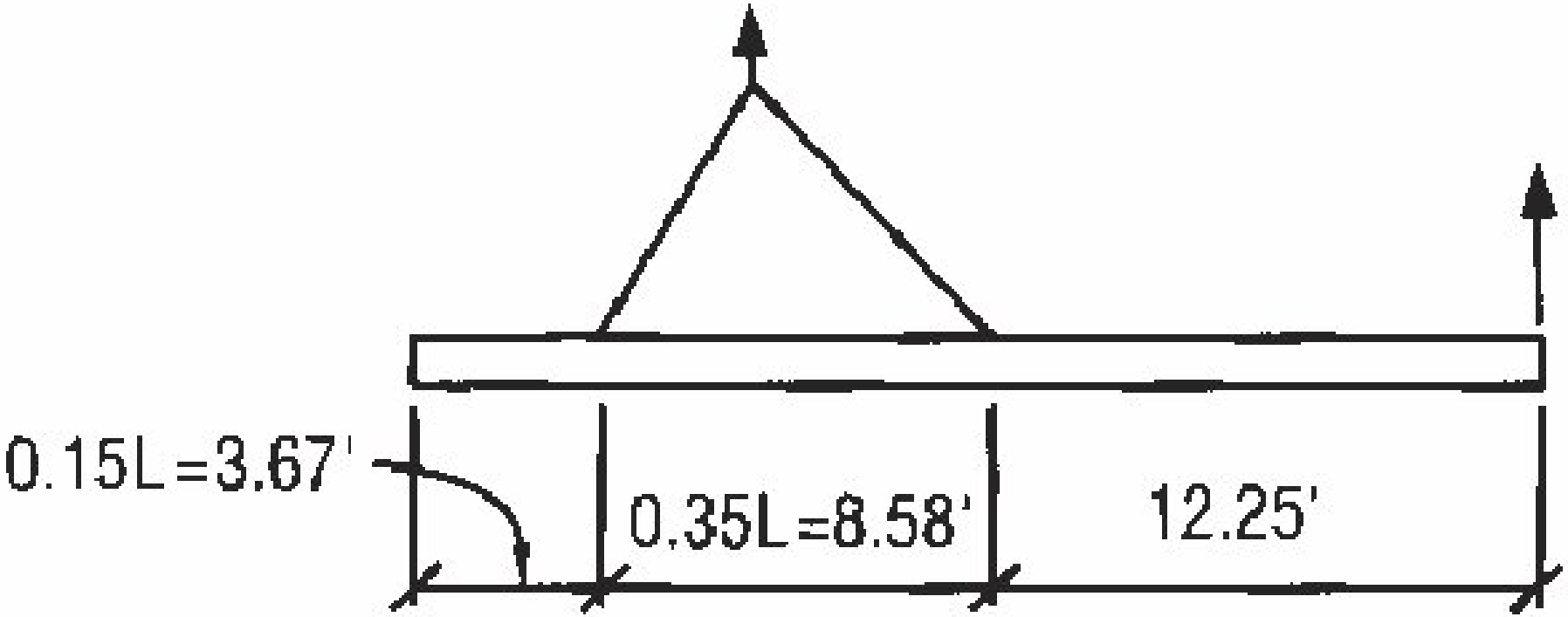

Two-Line Lift

Face Lifters in Form

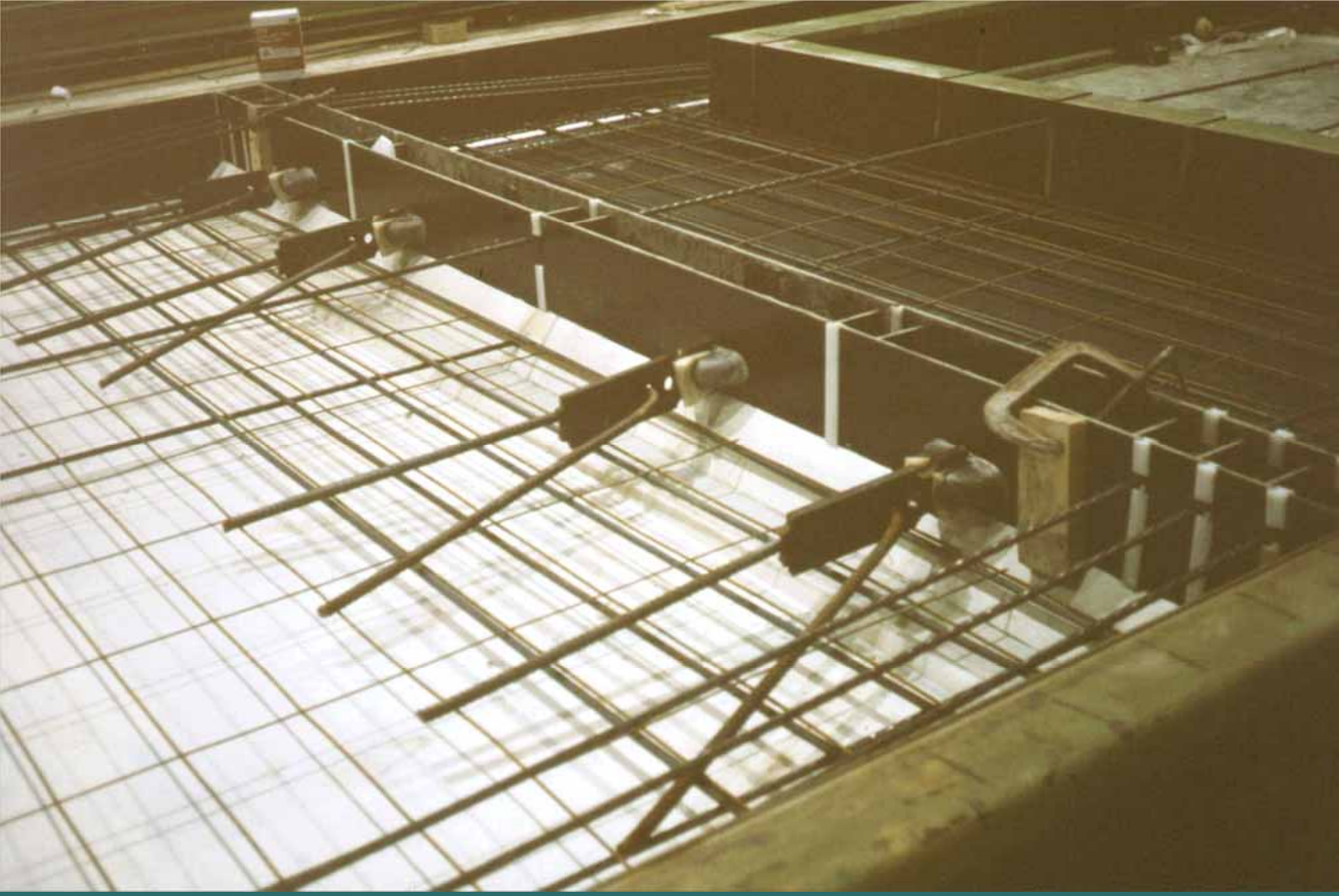

Top Edge Lifters in Form

Bracing Guidelines:

- Use ASCE 7-95 Design Loads
- Reduce from 50 yr to 5 yr Re-occurrence
- Use 1.5 Factor of Safety for Pipe Braces

Brace to “Deadmen”:

How are Sandwich Wall Panels Designed?

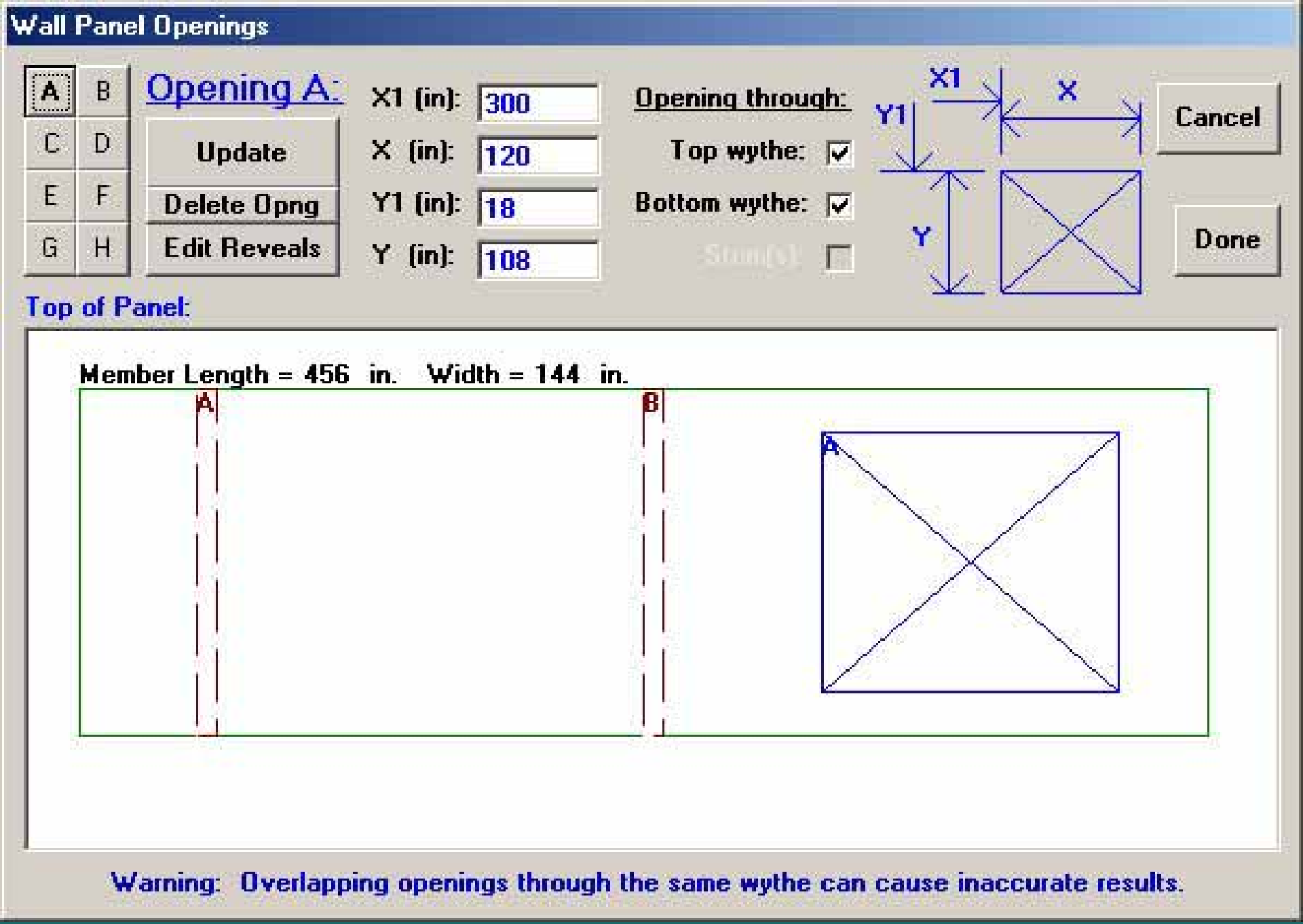

Sandwich Wall Panel with Dock Door Opening - Plan View

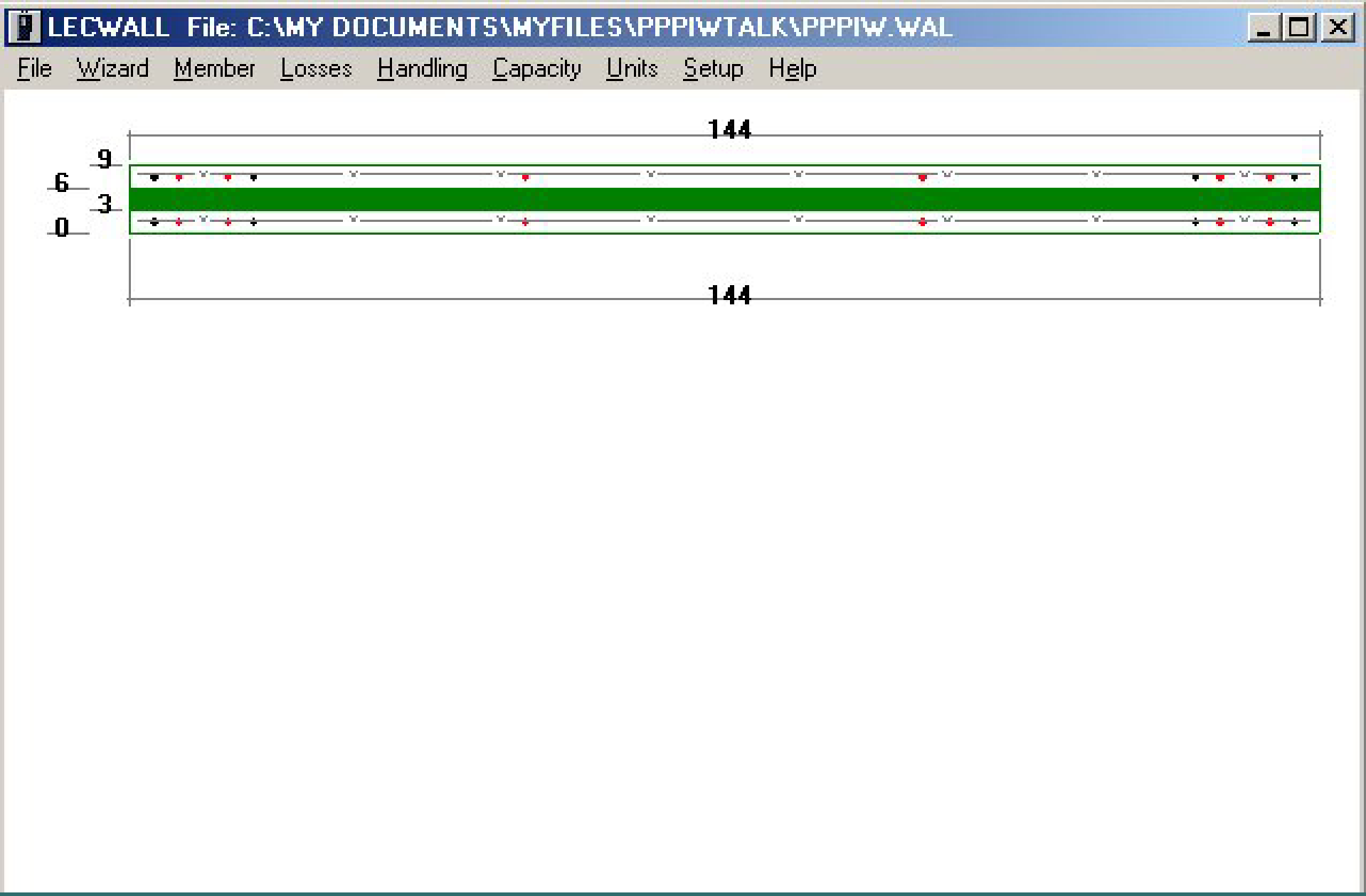

Sandwich Wall Panel with Dock Door Opening - Section

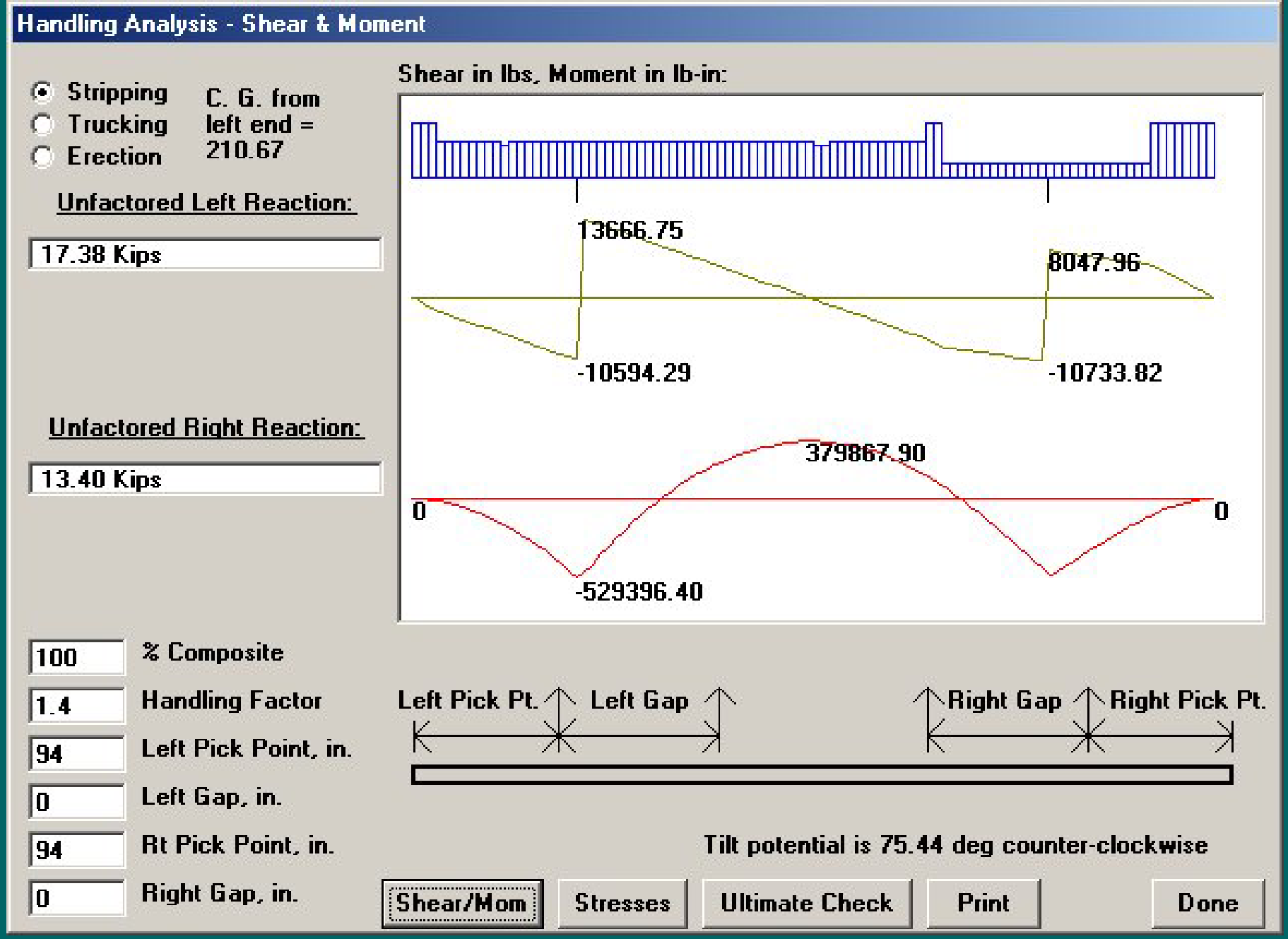

Stripping Forces, Shear and Moment Diagrams

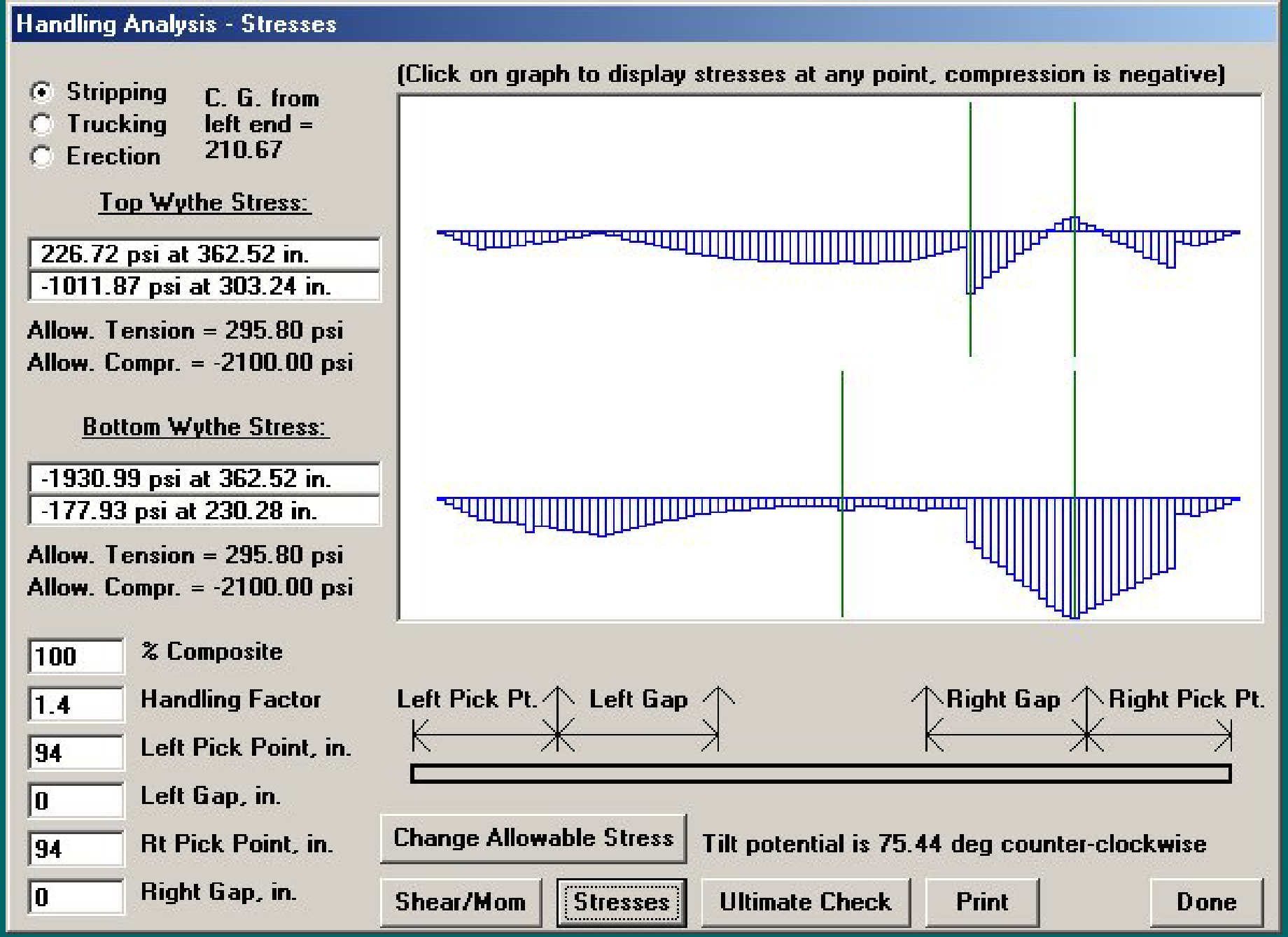

Stripping Stresses with 1.4 Handling Factor

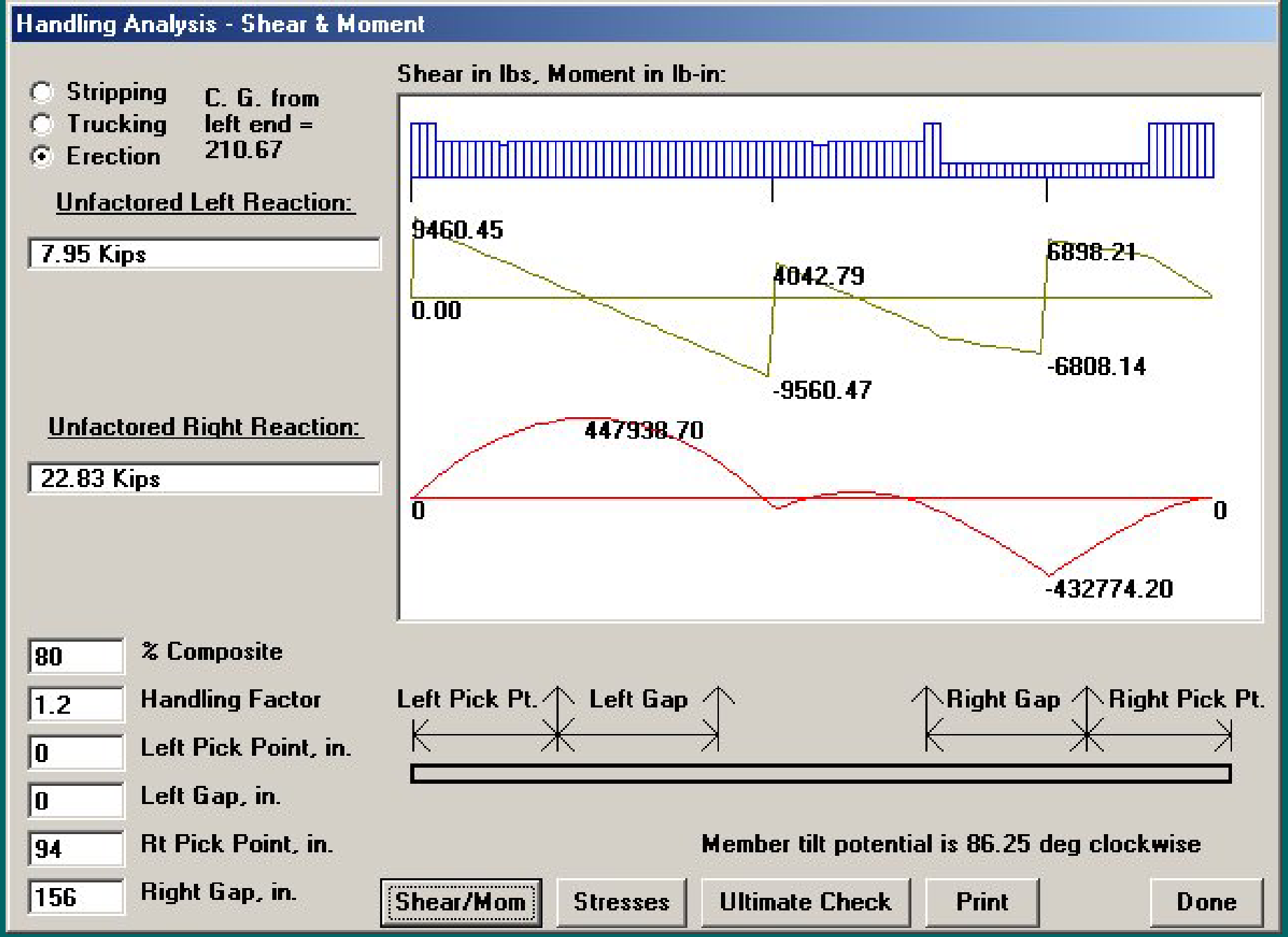

Erection Forces, Shear and Moment Diagrams - 2 Line Lift

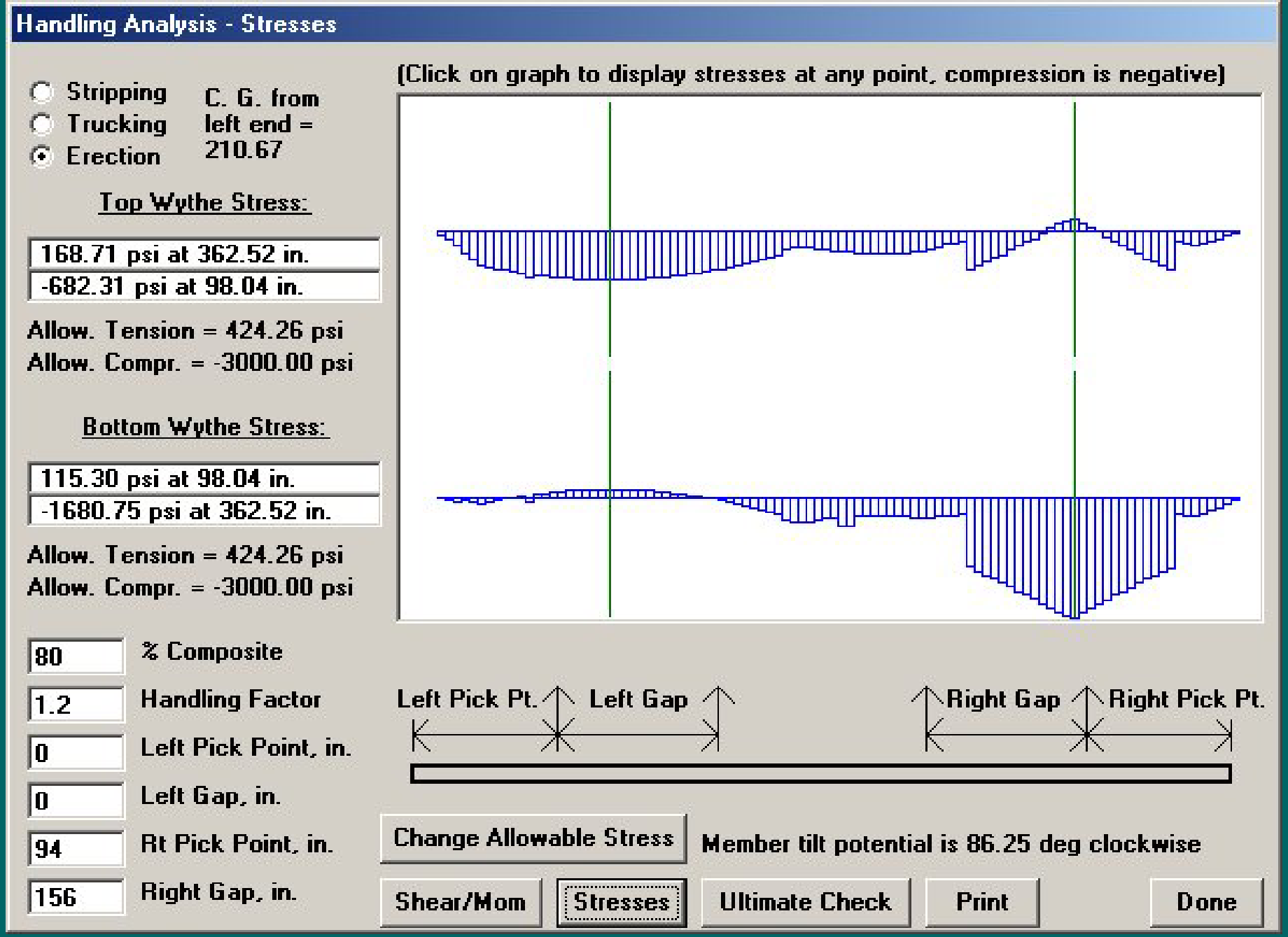

Erection Stresses with 1.2 Handling Factor

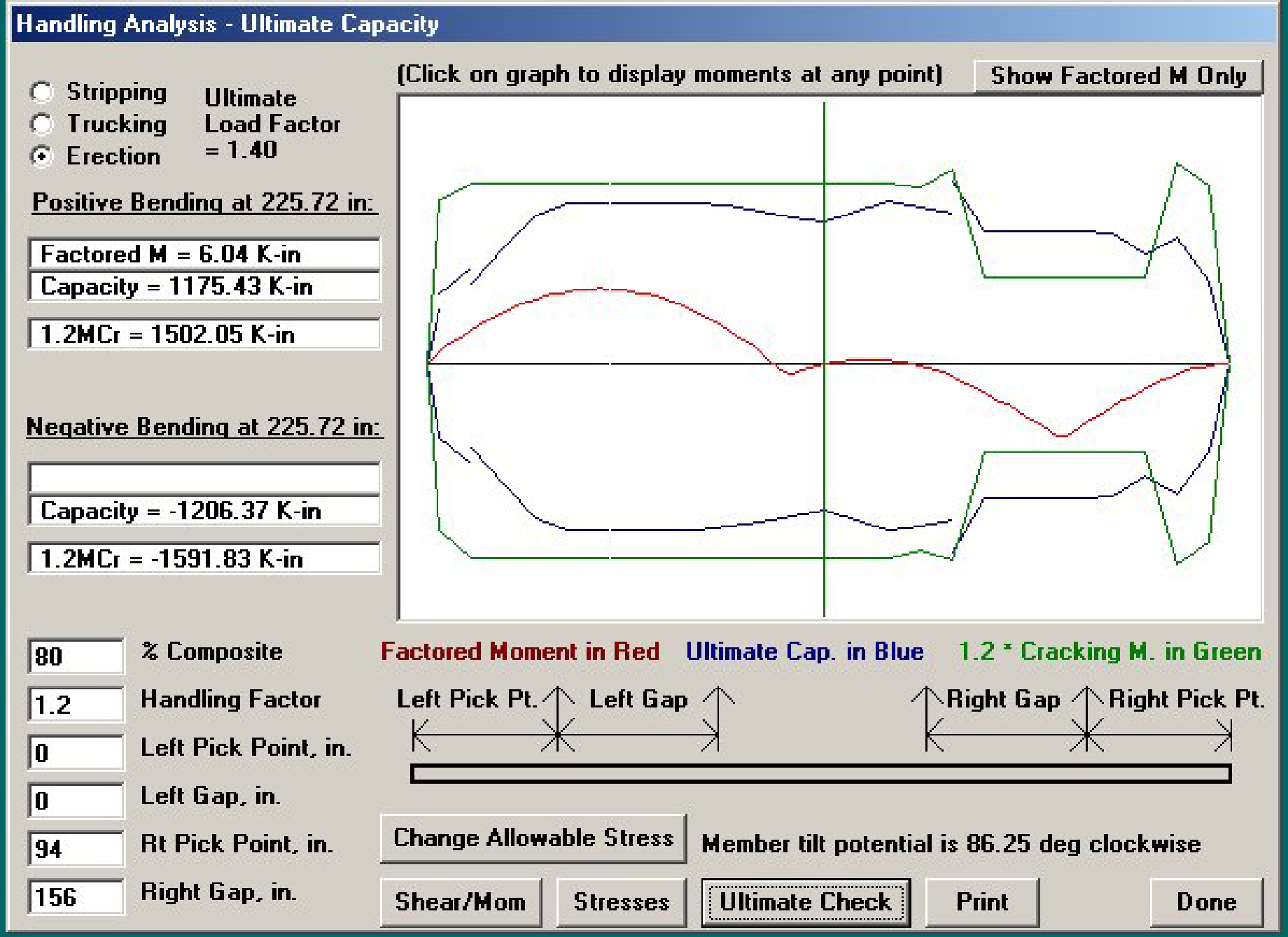

Factored Erection Moments - Ultimate Capacity Check

In-Place Loads for Load-Bearing Panel:

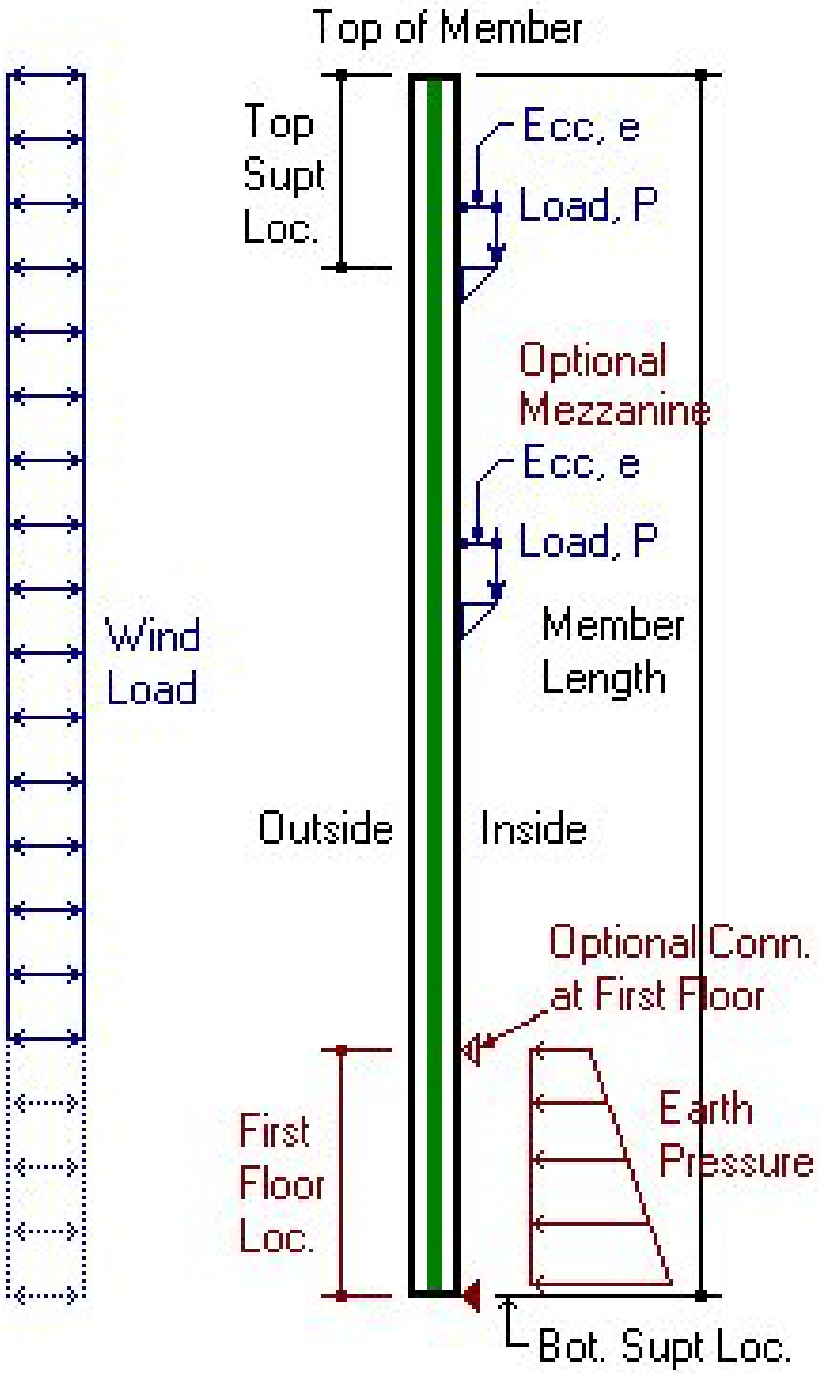

Applied Loads:

- Wind
- Gravity (Roof)
- Earth Pressure

Applied Loads

Service Wind Above Floor Conn, plf:

300 Suction 300 Pressure

Superimposed Dead Load, P:

Load 1:

Load magnitude in kips: 24

Eccentricity, e, from inside face of member, in: -2.5

Load applied at top support

Applied Live Load, P:

Load 1:

Load magnitude in kips: 30

Eccentricity, e, from inside face of member, in: -2.5

Load applied at top support

Earth Pressure:

Horizontal component of surcharge at top of retained earth, positive value denotes pressure from inside (psf): 0

Active lateral pressure per unit of depth, positive value denotes pressure from inside (psf/ft): 50

Distance from bottom of wall to top of retained earth, if no slab on grade floor tie is used (in): 0

(Input zero if slab on grade floor tie is used)

☑ Floor tie not active when lateral pressure applied

Cancel Done

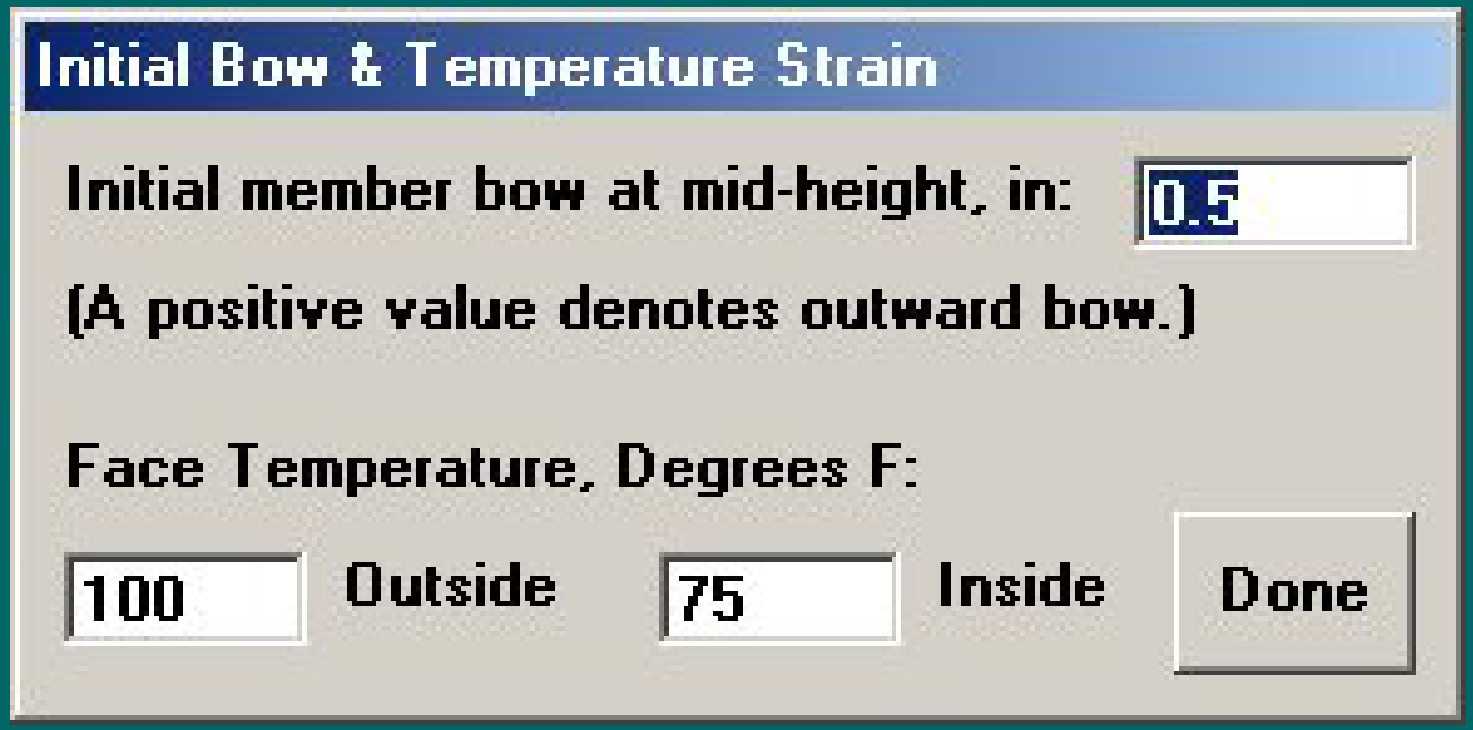

Account for Differential Temperature Strains

Wall & Column Capacity Under Design Loadings File: C:\MY DOCUMENTS\MYFILES\PPPIWTALK\PPPIW....

Input:

Applied Loads | Supports

Bow & Temperature

% composite at ultimate: 80

Cracking stress coefficient: 7.5

Include slenderness effects?

(•) Yes ( ) No

Load Case 4:

1	2	3	4	5	6
7	8	9	10	11	12

Service Dead + Wind

Show Moment Diagrams

Show Stresses | Crack Str

Connection Forces

Interaction Curves

Edit Default Load Cases

Print Input | Sections

Print Diagrams | Done

Output:

Suction at 412.68 in:

Pu (kips) = 50.55
Mu (kip-in) = -492.63
Outer Stress (psi) = -2042.66
Inner Stress (psi) = 62.58
Section is Uncracked
Midpoint Bow (in) = 0.93
(Outward Bow is Positive)
Force in Floor Ties
in Kips = 18.41
(Compression is Negative)

Pressure at 412.68 in:

Pu (kips) = 50.55
Mu (kip-in) = 462.94
Inner Stress (psi) = -1979.23
Outer Stress (psi) = -0.84
Section is Uncracked
Midpoint Bow (in) = 0.43
(Outward Bow is Positive)
Force in Floor Ties
in Kips = -17.44
(Compression is Negative)

Click on graph for values at any pt.

Magnified Moment

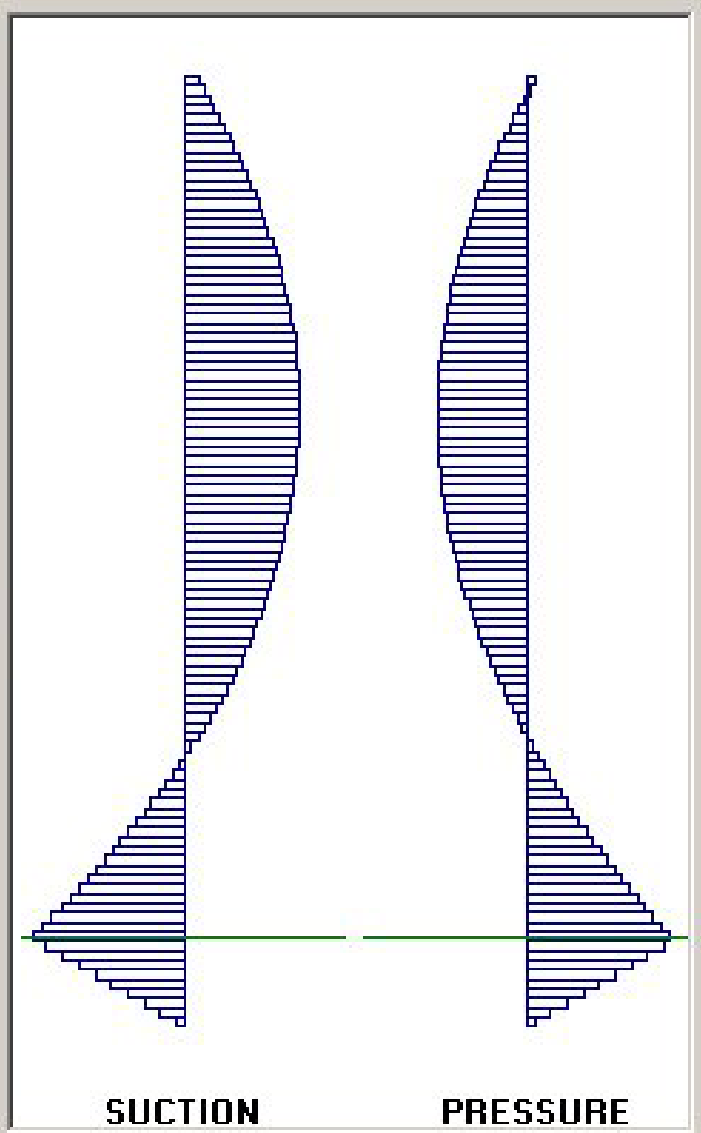

Service Wind Load Moment Diagram

Wall & Column Capacity Under Design Loadings File: C:\MY DOCUMENTS\MYFILES\PPPIWTALK\PPPIW....

Input:

Applied Loads | Supports

Bow & Temperature

% composite at ultimate: 80

Cracking stress coefficient: 7.5

Include slenderness effects?

(•) Yes ( ) No

Load Case 4:

1	2	3	4	5	6
7	8	9	10	11	12

Service Dead + Wind

Show Moment Diagrams

Show Stresses | Crack Str

Connection Forces

Interaction Curves

Edit Default Load Cases

Print Input | Sections

Print Diagrams | Done

Output:

Suction at 412.68 in:

Pu (kips) = 50.55
Mu (kip-in) = -492.63
Outer Stress (psi) = -2042.66
Inner Stress (psi) = 62.58
Section is Uncracked
Midpoint Bow (in) = 0.93
(Outward Bow is Positive)
Force in Floor Ties
in Kips = 18.41
(Compression is Negative)

Pressure at 412.68 in:

Pu (kips) = 50.55
Mu (kip-in) = 462.94
Inner Stress (psi) = -1979.23
Outer Stress (psi) = -0.84
Section is Uncracked
Midpoint Bow (in) = 0.43
(Outward Bow is Positive)
Force in Floor Ties
in Kips = -17.44
(Compression is Negative)

Click on graph for values at any pt.

Stresses

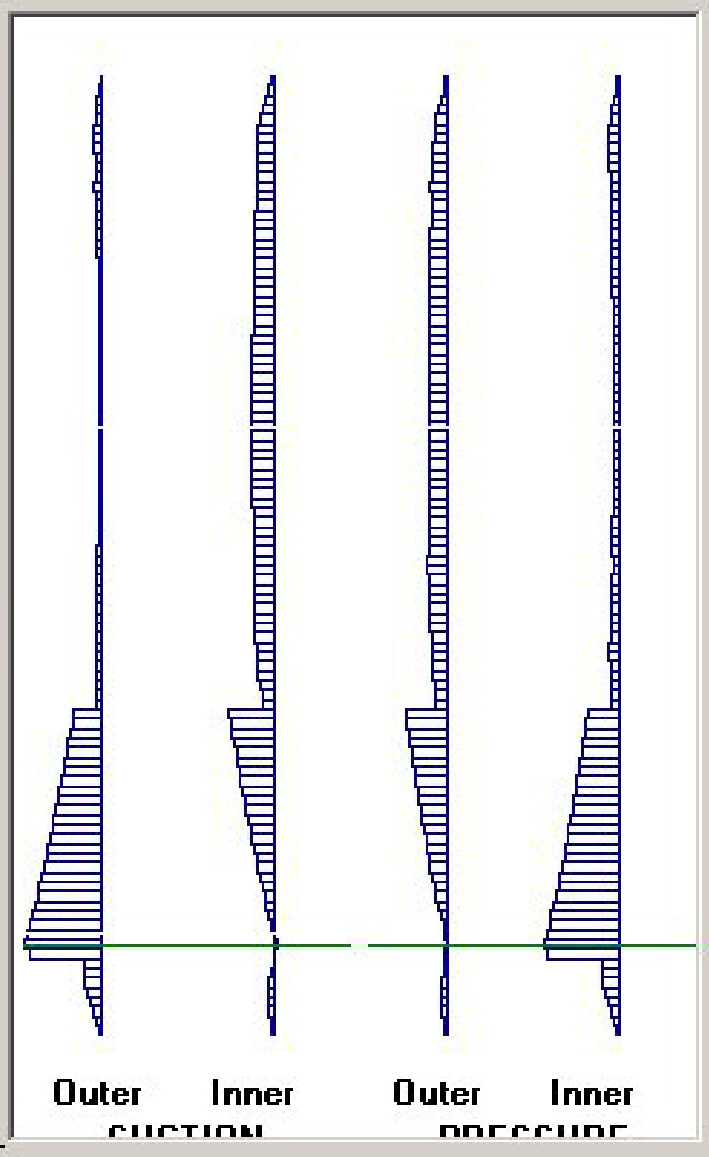

Service Wind Load Stresses

ACI 318 Section 14.8.4:

The maximum deflection due to service loads, including P-Delta effects, shall not exceed L/150.

Wall & Column Capacity Under Design Loadings File: C:\MY DOCUMENTS\MYFILES\PPPIWTALK\PPPIW....

Input:

Applied Loads | Supports

Bow & Temperature

% composite at ultimate: 80

Cracking stress coefficient: 7.5

Include slenderness effects?

(•) Yes ( ) No

Load Case 7:

1	2	3	4	5	6
7	8	9	10	11	12

ACI 1.4 (Dead + Temp)

Show Moment Diagrams

Show Stresses | Crack Str

Connection Forces

Interaction Curves

Edit Default Load Cases

Print Input | Sections

Print Diagrams | Done

Output:

Suction at 412.68 in:

Pu (kips) = 70.77
Mu (kip-in) = -732.81
Outer Stress (psi) = -2649.48
Inner Stress (psi) = 482.20
Section is Uncracked
Midpoint Bow (in) = 1.29
(Outward Bow is Positive)
Force in Floor Ties
in Kips = 19.42
(Compression is Negative)

Pressure at 412.68 in:

Pu (kips) = 70.77
Mu (kip-in) = -732.81
Inner Stress (psi) = 482.20
Outer Stress (psi) = -2649.48
Section is Uncracked
Midpoint Bow (in) = 1.29
(Outward Bow is Positive)
Force in Floor Ties
in Kips = 19.42
(Compression is Negative)

Click on graph for values at any pt.

Magnified Moment

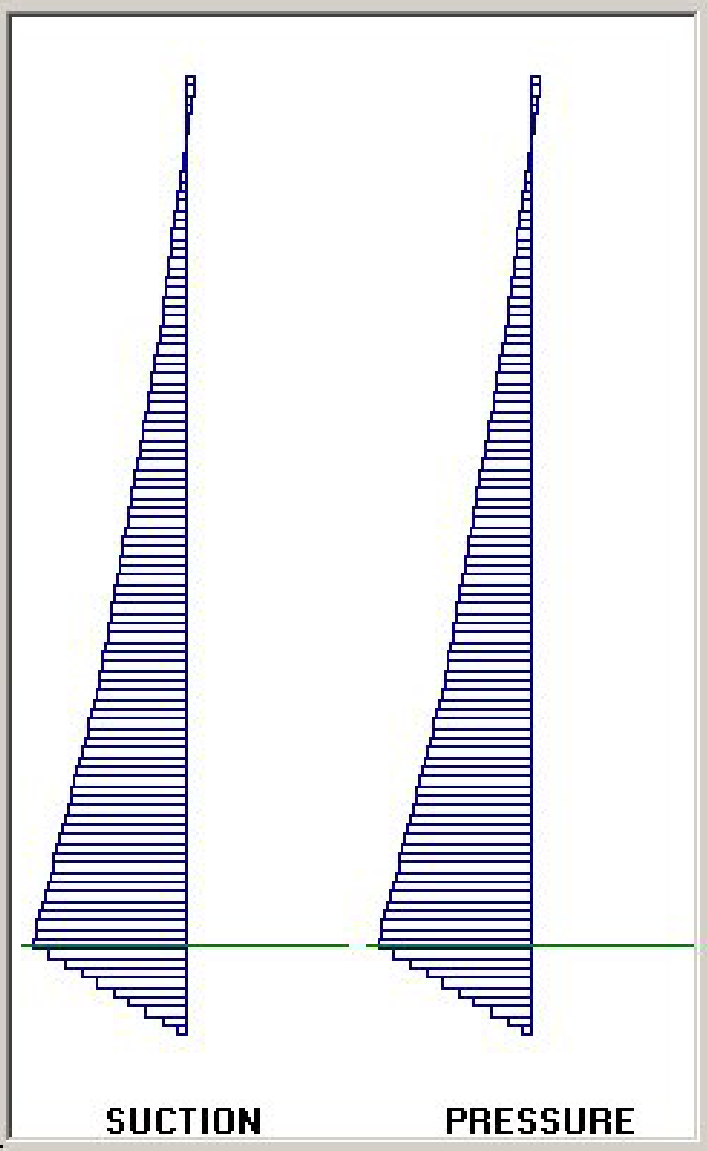

Differential Temperature Strain Moment Diagram

Wall & Column Capacity Under Design Loadings File: C:\MY DOCUMENTS\MYFILES\PPPIWTALK\PPPIW....

Input:

Applied Loads | Supports

Bow & Temperature

% composite at ultimate: 80

Cracking stress coefficient: 7.5

Include slenderness effects?

(•) Yes ( ) No

Load Case 7:

1	2	3	4	5	6
7	8	9	10	11	12

ACI 1.4 (Dead + Temp)

Show Moment Diagrams

Show Stresses | Crack Str

Connection Forces

Interaction Curves

Edit Default Load Cases

Print Input | Sections

Print Diagrams | Done

Output:

Suction at 412.68 in:

Pu (kips) = 70.77
Mu (kip-in) = -732.81
Outer Stress (psi) = -2649.48
Inner Stress (psi) = 482.20
Section is Uncracked
Midpoint Bow (in) = 1.29
(Outward Bow is Positive)
Force in Floor Ties
in Kips = 19.42
(Compression is Negative)

Pressure at 412.68 in:

Pu (kips) = 70.77
Mu (kip-in) = -732.81
Inner Stress (psi) = 482.20
Outer Stress (psi) = -2649.48
Section is Uncracked
Midpoint Bow (in) = 1.29
(Outward Bow is Positive)
Force in Floor Ties
in Kips = 19.42
(Compression is Negative)

Click on graph for values at any pt.

Stresses

Differential Temperature Stresses - Note Panel Bow

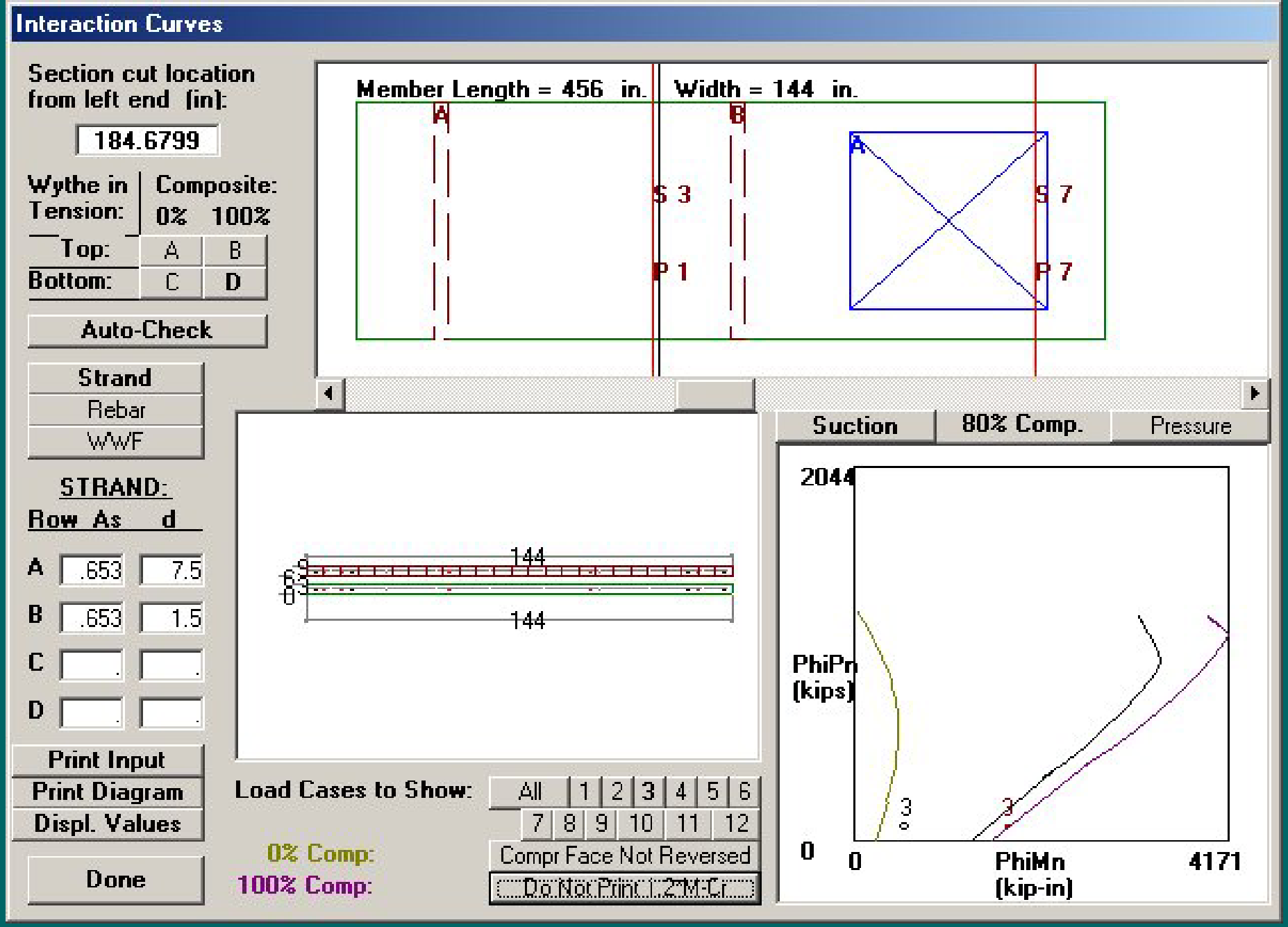

Ultimate Capacity Interaction Curves - Dead + Live + Wind

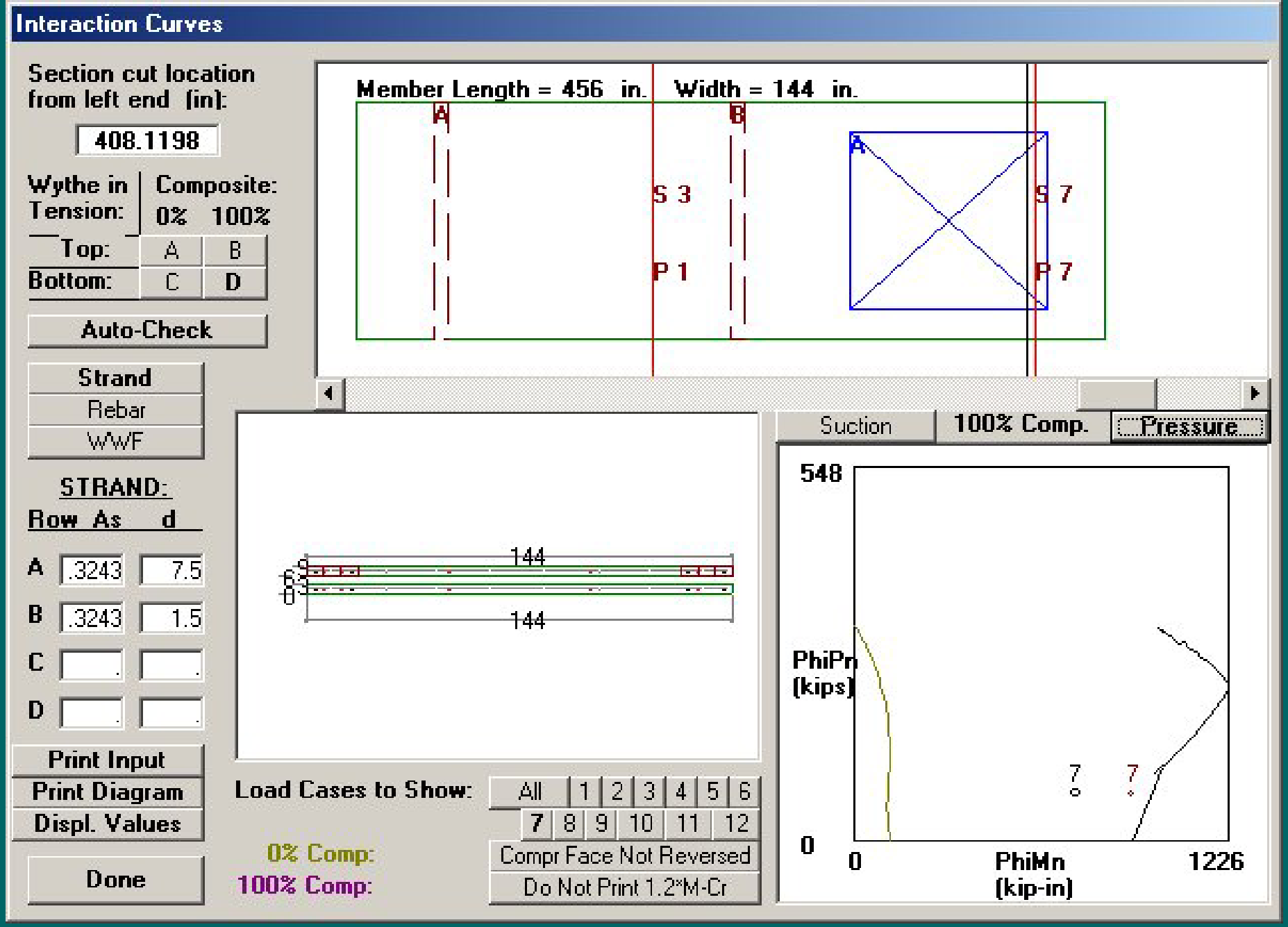

Ultimate Capacity Interaction Curves - Temperature Strain

Relevant ACI 318 Code Sections:

- 14.3.6, 18.11.2.2: Column ties not required when flexural tension controls
- 14.2.7: Maximum height/thickness ratio of 25:1 can be waived when structural analysis is done (P-Delta)
- 14.2.7, 16.4.2, 18.11.2.3: Minimum transverse reinforcement ratio of 0.001 can be used (instead of 0.002)
- 11.10.8: Shear walls do not usually need any shear reinforcement
- 10.11.5: Must use a 2nd order non-linear analysis including cracking when kl/r > 100

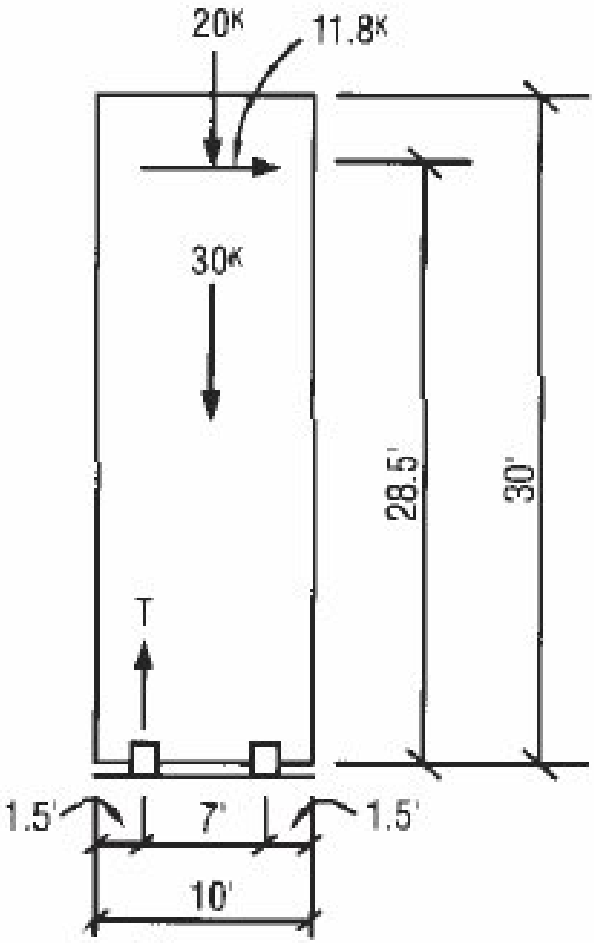

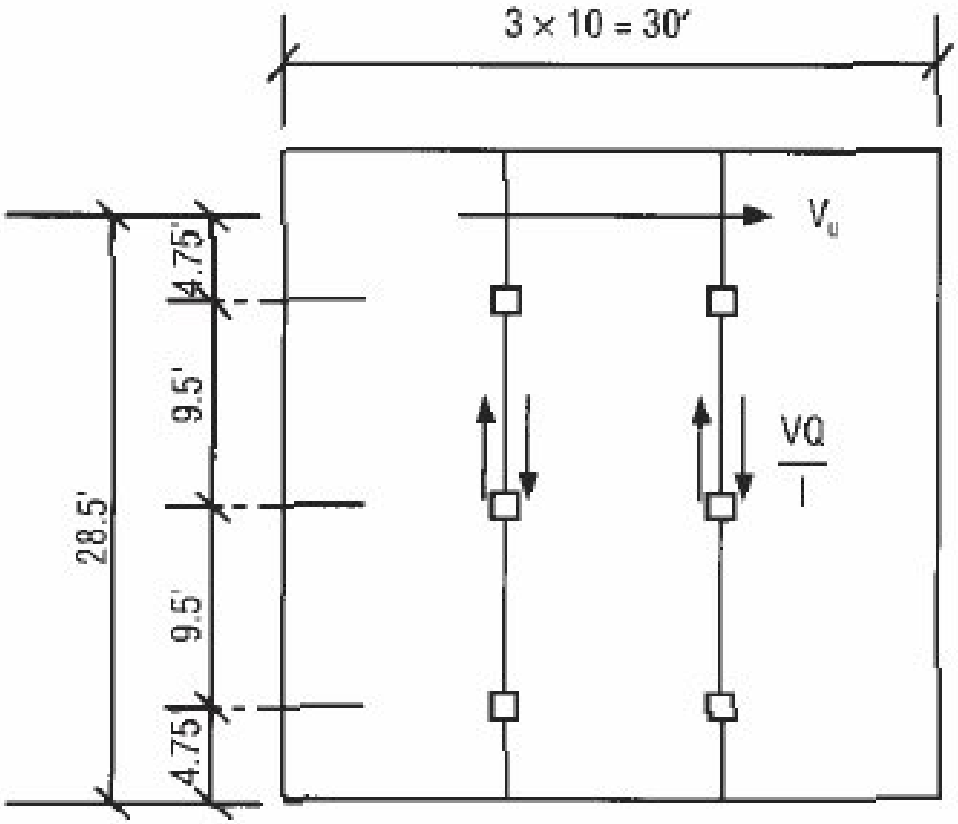

Individual

Linked

Shear Wall Design Examples

Design Tips to Save $$:

- Use repetition to reduce form changes
- Use Precaster's library of standard connection details
- Anticipate erection sequence to minimize move-ins
- Use modules for bay spacing:
  42' or 48' for 12' wide panels
  40' or 50' for 10' wide panels

Design Tips (continued):

- Punched openings preferred over "pork-chops" and C-shapes:

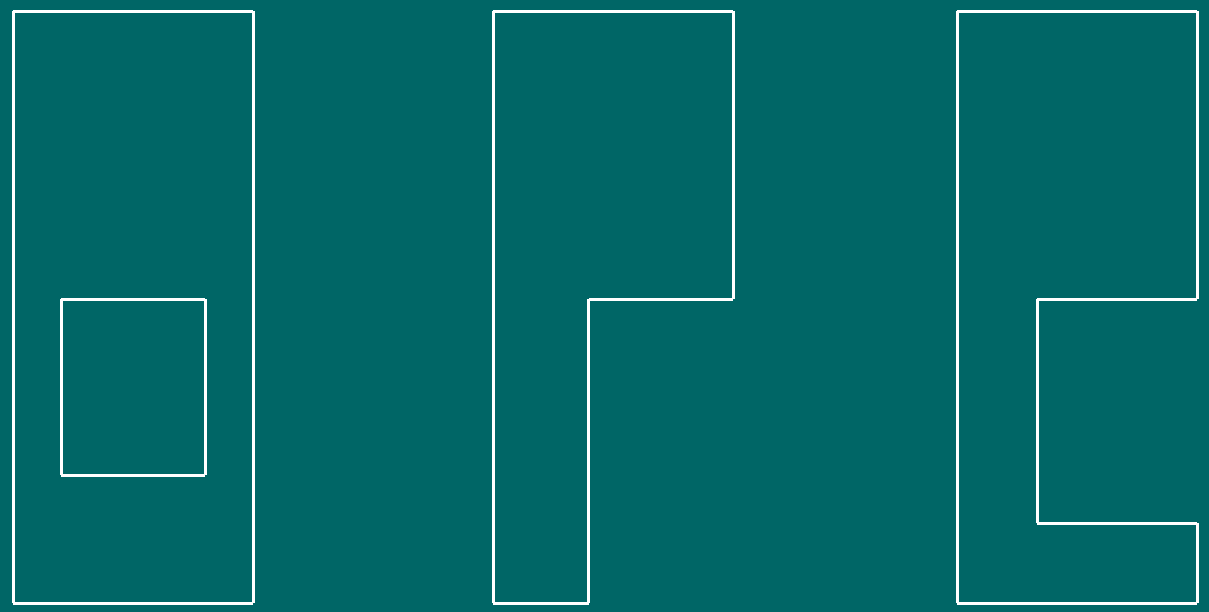

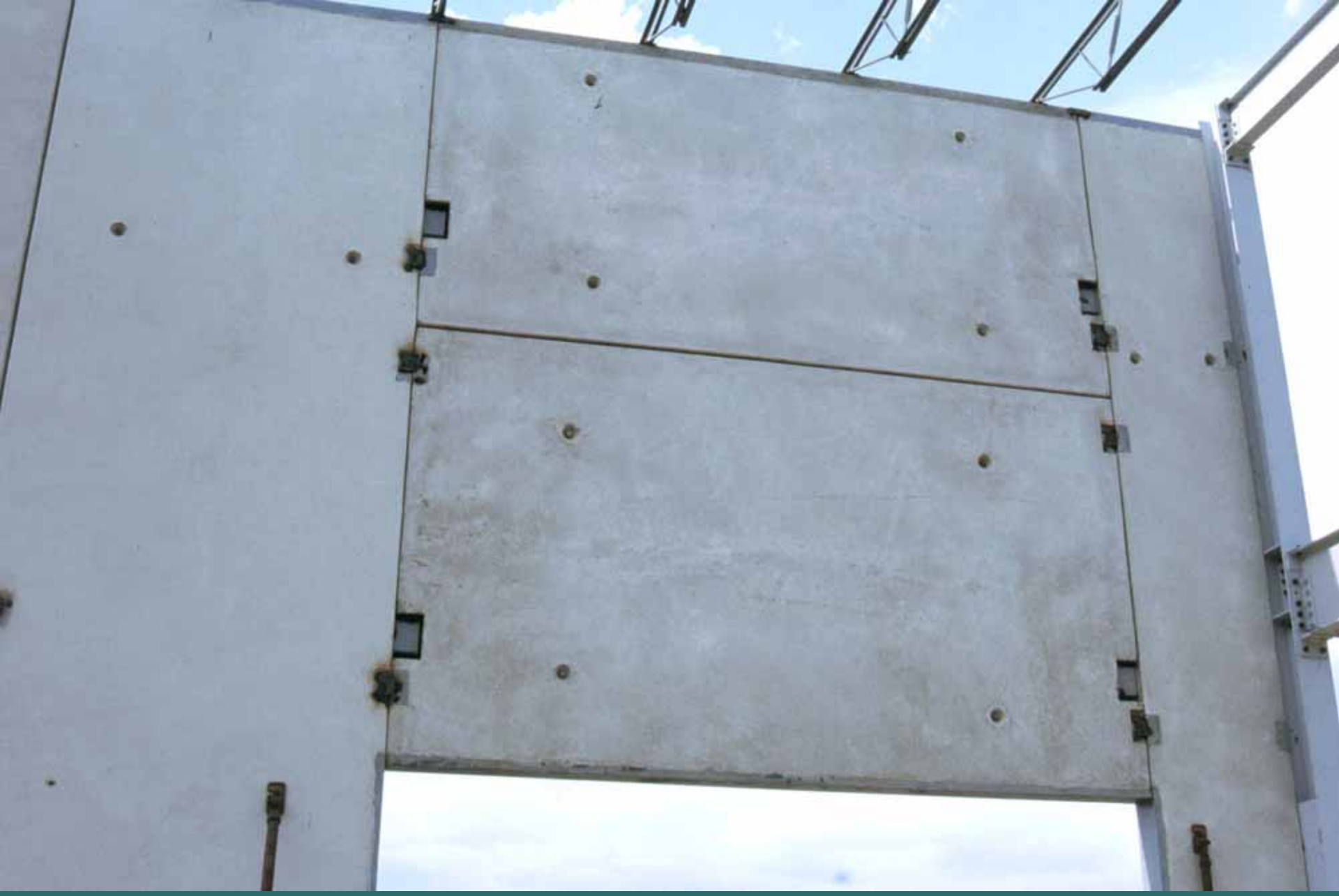

Hung Panels over Dock

Rabbet at Top of Panel for Bearing Steel Bar-Joist

Continuous Joist Bearing Angle

Individual Joist Bearing Angles

Cast-in Deck Bearing Ledge

Beam Bearing Pocket

Nut-Type Slotted Tie-back Connection with Threaded Rod

Slotted Tie-back Connection with Strap

Knife-Edge Embedded Plates Bearing on Column Haunches

Steel Bearing Tube Haunch in Form

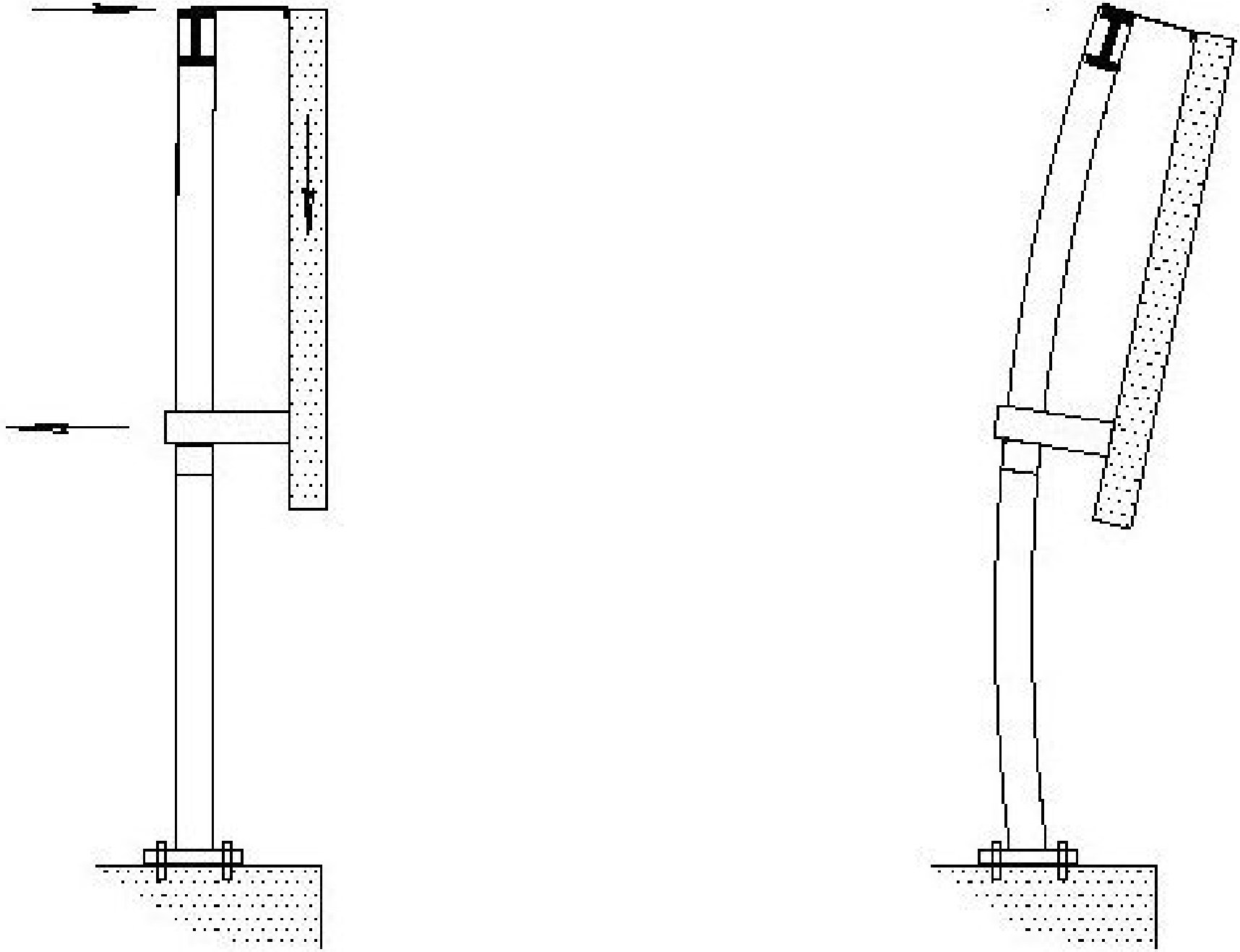

Hung Panel Rotation

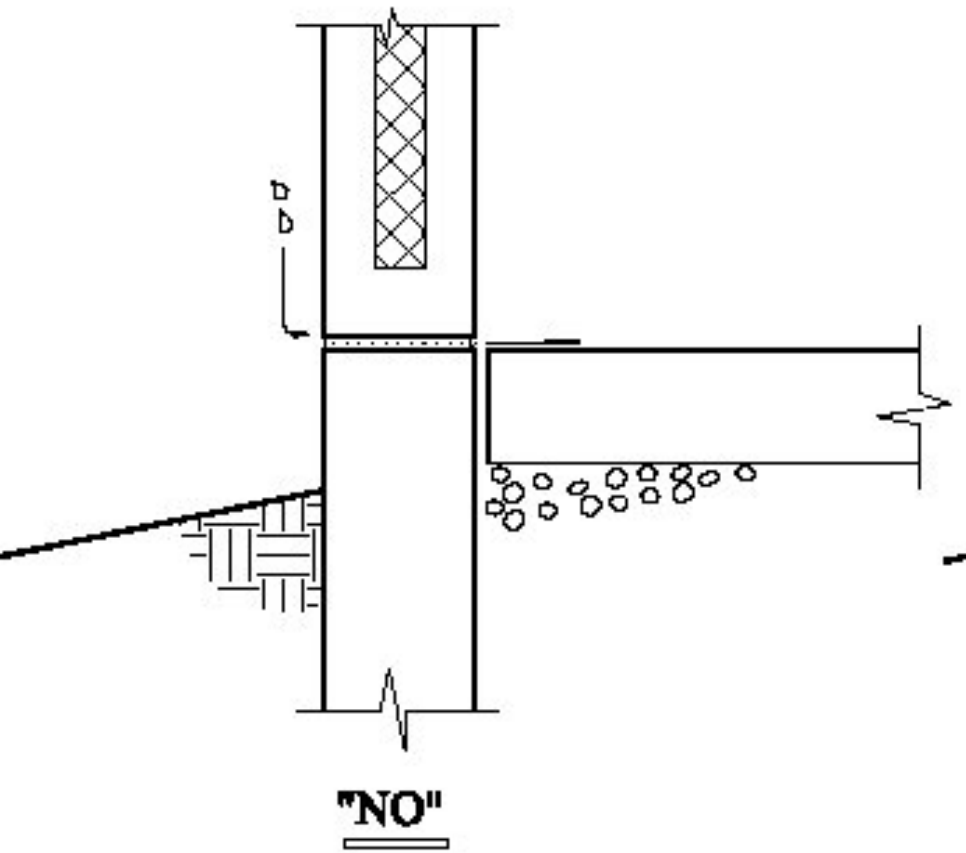

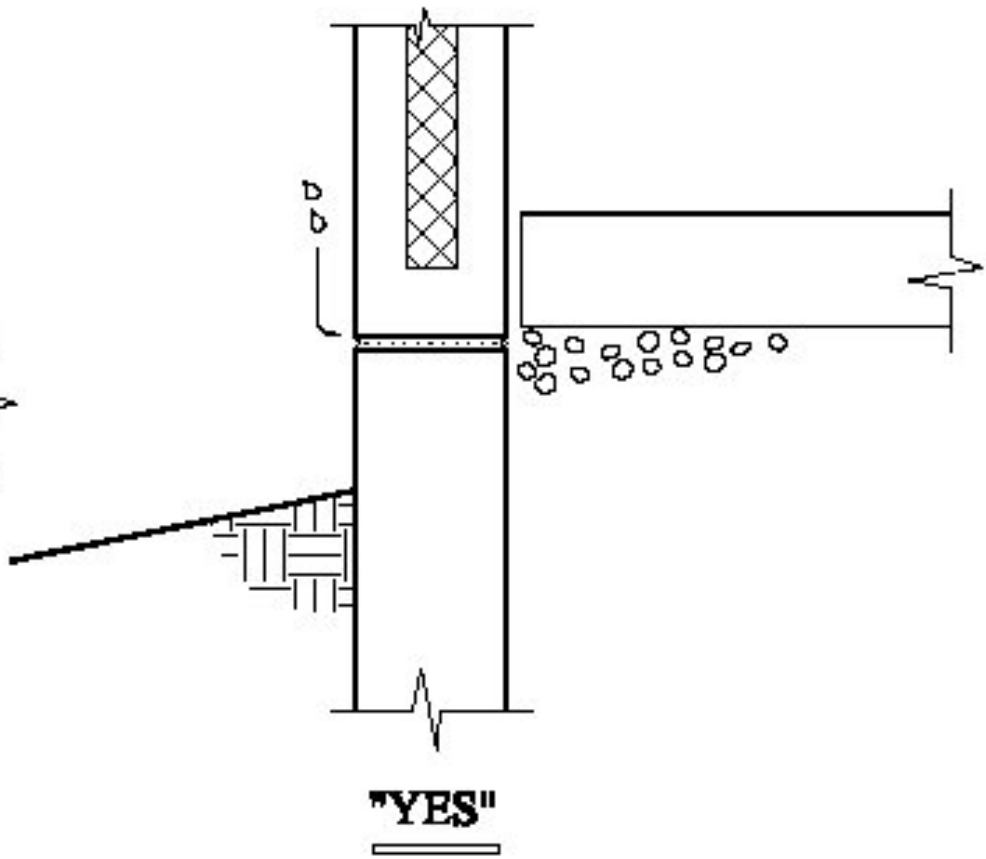

Preferred Base Detail to Prevent Potential Water Infiltration at Floor Level

www.PCI.org
312-786-0300

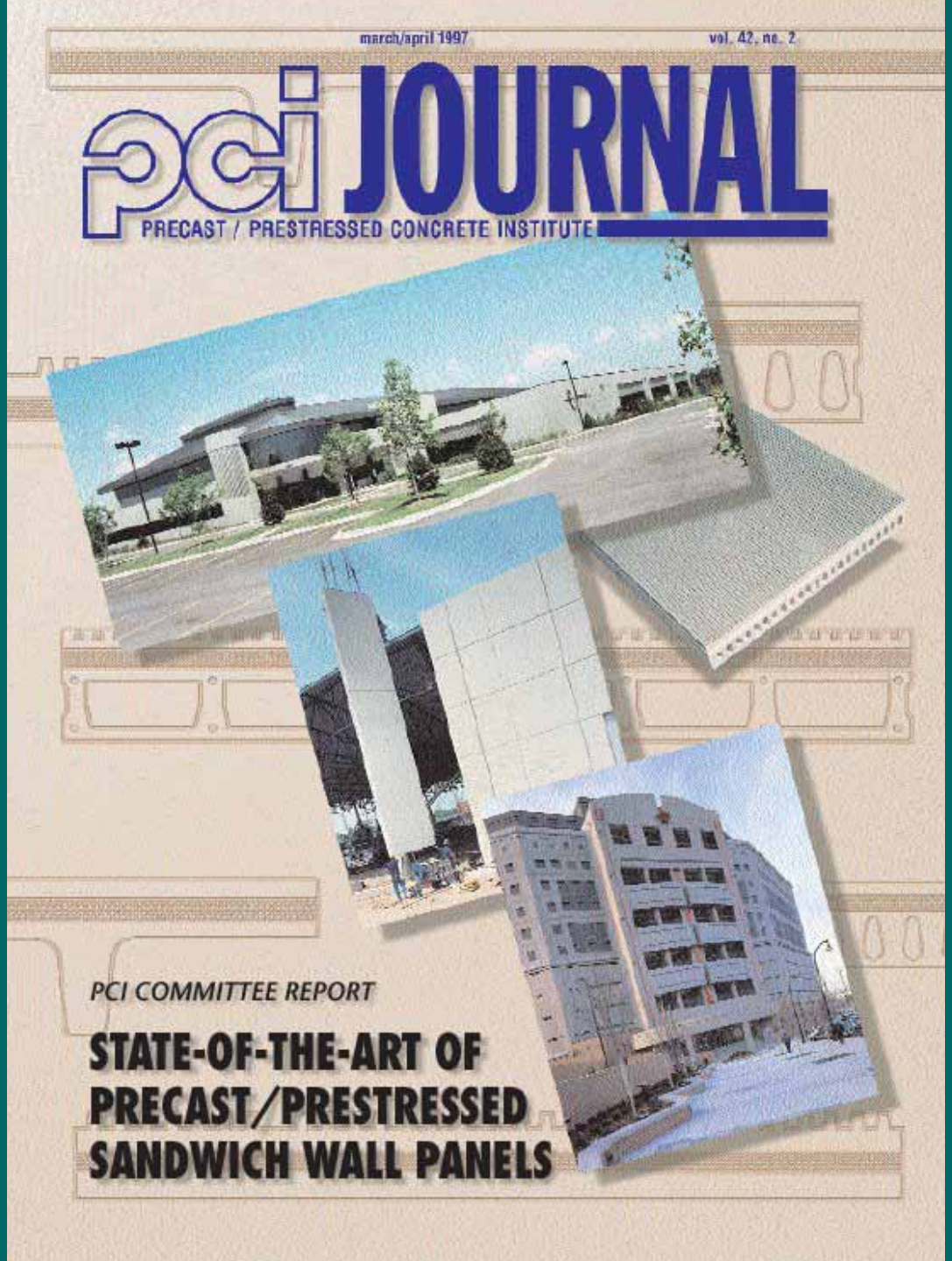

Pub. JR-403

www.PCI.org
312-786-0300

The Third International
Congress and Exhibition

fib CEB•FIP

Incorporating the PCI **Annual Convention & Bridge Conference**

First Invitation

Washington, D.C.
May 29 – June 2, 2010
Gaylord National Resort
www.fib2010washington.com

- 3 major events under one roof
- Thousands of attendees
- Over 30 countries represented
- Over 700 papers presented
- Over 100,000 ft² of exhibit space
- One international venue

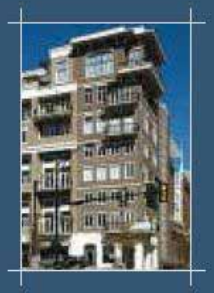
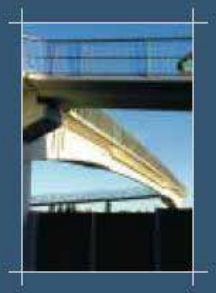


Organized by:
PCI
www.pci.org